Fire Safety Analysis Manual for LP-Gas Storage Facilities

Based on the 2008 Edition of NFPA 58 Liquefied Petroleum Gas Code

Developed by the National Fire Protection Association and the National Propane Gas Association

Funded by a Grant from the Propane Education & Research Council

Authors: Phani K. Raj, Ph.D., Technology and Management Systems, Inc.
Theodore C. Lemoff, PE, National Fire Protection Association

© 2009 Propane Education & Research Council PRC 005025

Fire Safety Analysis Manual
For
LP-Gas Storage Facilities

Based on the 2008 Edition of NFPA 58 *Liquefied Petroleum Gas Code*
First Printing July 2009

The official position of the NFPA on all aspects regarding propane storage facility safety is in NFPA 58, the *Liquefied Petroleum Gas Code*. This manual is not intended to replace NFPA 58.

The Propane Education & Research Council (PERC) is a non-profit 501(c)6 trade organization authorized by the Propane Education and Research Act of 1996 (PERA), Public Law 104-284. PERC was created "to enhance consumer and employee safety and training, to provide for research and development of clean and efficient propane utilization equipment, and to inform and educate the public about safety and other issues associated with the use of propane."

PERC is governed by a twenty-one member Board of Directors appointed by the National Propane Gas Association (NPGA) and the Gas Processors Association (GPA). PERC program beneficiaries include propane retail marketers, producers, transporters' and agricultural cooperatives, as well as representatives of allied service and supply industries (industry members).

The recommendations, standards, or recommended practices, as reflected in this document, were developed by independent consultants retained by PERC. While PERC administers the process of obtaining the information, it does not independently test or verify the accuracy of the information or methods used to collect the data that supports the conclusions or recommendations reflected in this document.

PERC, NPGA, GPA and the industry members disclaim any liability for any personal injury, property damage, business losses or other damages of any nature whatsoever, whether special, indirect, consequential or compensatory, directly or indirectly resulting from the publication, use, or reliance on this document, or any information, apparatus, method, process, or similar item disclosed in this document. This disclaimer of liability shall apply even if such loss or damage results, in whole or in part, from any acts or omissions of or by any negligence on the part of PERC, NPGA, GPA or industry members or any persons who contributed to the development of the information contained in this document. PERC, NPGA, GPA and industry members make no warranty or guaranty as to the accuracy or completeness of any information published in this document.

The procedures and information in this document are intended to implement the standards set forth in the documents referenced with capabilities of the personnel and equipment available. It does not create new standards or criteria for compliance. The order of steps

in any procedure may or may not be of importance. This material is not sold nor is it a product of any consulting or engineering activity.

Users of this document should consult the law of their individual jurisdictions for codes, standards and legal requirements applicable to them. This document is not intended nor should it be construed to (1) set forth policies or procedures which are the general custom or practice in the propane industry; (2) to establish the legal standards of care owed by propane distributors to their customers; or (3) to prevent the user from using different methods to implement applicable codes, standards or legal requirements.

By disseminating or publishing this document, PERC is not undertaking to render any professional or other service to or on behalf of any person or entity. PERC, NPGA, GPA and the industry members are not undertaking to perform any duty owed by any person or entity to any third party. Anyone reading or using this document should rely on his or her own judgment or, as appropriate, should seek the advice of a competent professional in determining the exercise of reasonable care in any and all circumstances.

First Printing
July 2009

Origin and Development of the Fire Safety Analysis Manual

The requirement for a Fire Safety Analysis (FSA) was introduced in the 1976 edition of NFPA 58, along with the requirement for emergency shutoff valves at locations where hoses and swivel type piping were used (for connection to cargo tank vehicles and rail cars). A Fire Safety Analysis was required for new propane storage plants with capacities of more than 4,000 gallons located in "heavily populated or congested areas".

This requirement was basically unchanged until the 2001 edition of NFPA 58, where the FSA was required for all propane storage plants with capacities of more than 4,000 gallons, with a three year period for existing facilities to be brought into compliance. As the majority of plants requiring a FSA did not have one in 2001, the need for guidance on how to conduct the FSA became apparent. Prior to 2001, the FSA was usually conducted by an independent consultant with knowledge of propane and fire safety. The concept a consistent methodology was identified by a propane marketer in New England, Jim Hurley of Eastern Propane. The first two editions of the Manual were dedicated to Jim in recognition of his vision.

The recommendation resulted in NFPA working with NPGA to submit a proposal to PERC to develop a FSA manual to assist marketers in complying with the FSA requirement. When the project was approved, NPGA established an advisory committee and worked with NFPA to develop the manual.

Since the 2001 edition of the manual, it has been updated twice to retain correct numbers of the paragraphs referenced in NFPA 58, as they are sometimes revised and renumbered. No technically substantive changes have been made to the manual since the first edition was published.

The models used in the Fire Safety Analysis (FSA) Manual to determine the distances to hazards (presented in Table B-1 of the FSA Manual) are based on published models in the literature. These models have been published in government reports, journal articles[1,2] , EPA-suggested procedures[3] and engineering monographs and books. The models used are considered conservative and have been simplified for the purposes of the FSA Manual.

---

1 A general reference on hazard distance assessment models is: Lees, F.P. (Editor), "*Loss Prevention in the Process Industries*," 2nd Edition, Vol 1, 2 & 3, Butterworth Heinemann Publishers, Oxford, England, 1996.

2 Raj, P.K.*,"Exposure of a liquefied gas container to an external fire*," Journal of Hazardous Materials, v 122, Issues 1-2, p 37-49, June 2005.

3 US EPA, "*Technical Guidance for Hazard Analysis*," Emergency Planning for Extremely Hazardous Substances, EPA/FEMA/DOT, December 1987.

Acknowledgments

This third edition of the Fire Safety Analysis (FSA) Manual, based on the 2008 edition of NFPA 58, is a continuation of the effort to fulfill a need for an easily used and simple aid for the members of propane industry to fulfill their obligations under the NFPA 58 (2001, 2004 and 2008 editions) which require developing a written FSA. The project was funded by the Propane Education & Research Council through the National Propane Gas Association (NPGA). The National Fire Protection Association (NFPA) was the principal contractor for the first edition of the manual. Technology & Management Systems, Inc. (TMS) developed the technical analyses and several chapters of the first edition of the manual, as a subcontractor to NFPA.

Mr. Theodore C. Lemoff, Principal Gases Engineer, was the principal investigator at NFPA. Dr. Phani K. Raj was the principal investigator and analyst at TMS. Mr. Bruce Swiecicki, P.E., Senior Technical Advisor at NPGA, served as a staff technical reviewer.

In preparation for the first edition, NPGA assembled an Advisory Committee consisting of representatives from the propane industry, a Fire Department of a major city in the US and a Fire Protection Engineer. The Committee provided technical inputs and guidance to the project team on industry safety practices, types of information that an authority having jurisdiction and emergency responders would want to see in an FSA, an insight into the levels of understanding of various issues related to FSA in the industry, etc. The Advisory Committee set not only the direction of the project but made policy decisions related to the scope of the FSA manual. Except for the contractors, every member of the Advisory Committee had a vote and many decisions were made on the basis of a Committee vote. The **Advisory Committee** consisted of the following (voting) members.

1	Michael Merrill **(Chairman)**	Suburban Propane LP	Whippany, NJ
2	Mr. Greg Benton	Georgia Gas Distributors	Atlanta, GA
3	Mr. Billy Cox	O'Nealgas Inc.	Choudrant, LA
4	Mr. James Howe	Howe Engineers, Inc.	West Falmouth, MA
5	Mr. Jerry Lucas	Heritage Propane Partners, LP	Sallisaw, OK
6	Mr. Rob Scott	Scott & Associates	Kingsburg, CA
7	Mr. Cliff Slisz	Ferrellgas	Liberty, MO
8	Mr. Scott Stookey	City of Phoenix Fire Department	Phoenix, AZ
9	Mr. Ron Stover	Mutual Liquid Gas & Equipment	Gardena, CA
10	Mr. Robert Wallace	Dowdle Butane Gas Co Inc	Maryville, TN
11	Mr. Brent Wolcott	Ag Valley Coop	Edison, NE

Mr. Theodore Lemoff and Dr. Phani Raj participated in the deliberations of the meetings of the Advisory Committee as non-voting members.

About the Authors

Phani K. Raj, Ph.D.
Dr. Raj is the President of Technology & Management Systems, Inc. (TMS). He holds S.M. and Ph.D. degrees in Mechanical Engineering as well as an MBA degree.

He has over 30 years professional experience in conducting safety research and assessing risks in the storage, transportation, handling and utilization of hazardous materials, including energy fluids. His research has included the development of mathematical models to describe the accidental release behavior of chemicals and flammable materials. In addition, he has developed easy to follow safety guideline documents and hazard assessment manuals for a number of clients including the Federal Agencies and industrial clients.

Dr. Raj developed a number of models for the "Chemical Hazard Response Information System" (CHRIS), which the U.S. Coast Guard and the National Response Center use for assisting in case of hazardous material emergencies. He is the author of CHRIS Manual III "Hazard Assessment Handbook."

Since 1996 he has been a member of the NFPA's Technical Committee on Liquefied Petroleum Gases which writes NFPA 58, *Liquefied Petroleum Gas Code*. He was a member of the Committee Transportation of Hazardous Materials (of the National Research Council), and emeritus member of the Editorial Board of the Journal of Hazardous Materials. He has held the post of visiting lecturer at MIT and taught, in the Chemical Engineering Department, a graduate level course. He is the principal author of over 100 technical reports and over 40 technical papers.

Theodore C. Lemoff, PE
Mr. Lemoff is the Principal Gases Engineer at the National Fire Protection Association. He holds a Bachelor of Engineering degree in Chemical Engineering and is a registered professional engineer in Massachusetts.

He has over 40 years experience in the fire safety and the chemical industry, with his last 23 years at NFPA working in the flammable gases area. He is the staff liaison and secretary to the NFPA Technical Committee on Liquefied Petroleum Gases, responsible for NFPA 58, and for other NFPA codes and standards on flammable gases. He provides staff interpretations and conducts seminars on NFPA 58 and is the editor of NFPA's Liquefied Petroleum Gases Handbook and National Fuel Gas Code Handbook.

Mr. Lemoff is a member of the American Institute of Chemical Engineers, the Society of Fire Protection Engineers, the Society of Gas Engineers, and the American Society of Plumbing Engineers.

Table of Contents

	Page #
Origin and Development of the Fire Safety Analysis Manual	(iii)
Acknowledgments	(iv)
About the authors	(v)
CHAPTER 1 Introduction	
1.1 Background	1-1
1.2 Scope of the Manual	1-2
1.3 Need for a FSA Manual	1-3
1.4 LP-Gas Safety Record and Risks	1-4
1.5 Organization of the FSA Manual	1-5
CHAPTER 2 LP-Gas Storage Container Safety Features	
2.1 A Historical Perspective	2-1
2.2 Current LP-Gas Storage Container Safety Features	2-3
CHAPTER 3 Principal Elements of Fire Safety Analysis	
3.1 Important Steps in Conducting the Analysis	3-1
3.2 Completing the FSA	3-2
CHAPTER 4 Facility Information	
4.1 Initial Data for the LP-Gas Facility	4-1
4.2 Facility Storage Capacity and Other Details	4-1
4.3 Additional Facility Information	4-2
CHAPTER 5 Analysis of Product Control Measures in Containers and Transfer Piping	
5.1 Product Control Measures in Containers	5-1
5.1.1 Individual Containers of Water Capacity less than or equal to 2,000 gallons	5-2
5.1.2 Individual Containers greater than 2,000 gallons water capacity and less than or equal to 4,000 gallons water capacity	5-8
A) Containers used in Residential and Commercial Facilities	5-8
B) Containers used in Bulk and Industrial Facilities	5-11
5.1.3 Individual Containers of Water Capacity greater than 4,000 gallons used in Bulk Plants and Industrial Plants	5-17
5.2 Product Control Measures in Transfer Piping	5-23
5.2.1 Manifolded and Remotely Filled Containers	5-23
5.3 Alternate Provisions for the Installation of ASME Containers	5-26
5.3.1 ASME Container Appurtenances and Redundant Fail-Safe Product Control Systems	5-26
5.3.2 Low Emission Transfer Equipment	5-28

CHAPTER 6 Analysis of Local Conditions of Hazard
6.1 Physical Protection Measures 6-1
6.2 Ignition Sources and Control 6-2
6.3 Separation Distances 6-3
6.3.1 Separation Distances between Container and Important Buildings, Other Properties and Transfer Points 6-3
6.3.2 Separation Distances between Transfer Points and other Exposures 6-4
6.4 Special Protection 6-5
6.5 Vehicular Protection 6-6

CHAPTER 7 Exposure to and from Other Properties, Population Density
7.1 Exposure to off-site properties and persons from in-plant propane releases 7-1
7.2 Exposure to Propane Plants From External Events 7-3

CHAPTER 8 Evaluation of Fire Services and Water Supply Requirements
8.1 Details of the Fire Service 8-1
8.2 Water Needs and Availability 8-3

CHAPTER 9 Evaluation Summary for a Proposed New LP-Gas Facility

CHAPTER 10 Fire Safety Analysis Examples
10.1 Illustrative Example # 1 10-2
10.2 Illustrative Example # 2 10-21
10.3 Illustrative Example # 3 10-39
10.4 Illustrative Example # 4 10-57

Glossary and Acronyms G-1

Appendix A: Fill-In Forms A-1

Appendix B: Results of Hazard Distance Calculations for Different LPG Release Scenarios B-1

Copyright 2009 Propane Education & Research Council. All rights reserved. Reproduction of this publication in other than its entirety is prohibited without permission in writing from the Propane Education & Research Council and the authors.

List of Forms

		Page #
Form 4.1	Initial Data on the LP-Gas Facility	4-1
Form 4.2	Facility Storage Capacity	4-2
Form 4.3	Additional Information on the LP-Gas Facility	4-3
Form 5.1	Compliance with Code Requirements for Appurtenances on Containers of 2,000 Gallons Water Capacity or Less	5-3
Form 5.2	Compliance with Code Requirements for Appurtenances on Containers of Water Capacity 2,001 Gallons Through 4,000 Gallons Used in Residences and Commercial Facilities	5-10
Form 5.3	Compliance with Code Requirements for Appurtenances on Containers of Water Capacity 2,001 Gallons Through 4,000 Gallons Used in Bulk Plants and Industrial Plants	5-12
Form 5.4	Compliance with Code Requirements for Appurtenances on Containers of Greater than 4,000 Gallons Water Capacity Used in Bulk Plants and Industrial Plants	5-18
Form 5.5	Requirements for Transfer Lines of 1½ inch Diameter or Larger, Liquid-into-Containers	5-23
Form 5.6	Requirements for Transfer Lines of 1½ inch Diameter or Larger, Liquid Withdrawal from Containers	5-24
Form 5.7	Requirements for Vapor Transfer Lines 1¼-inch Diameter or Larger	5-25
Form 5.8	Evaluation of Redundant Fail-Safe Design	5-26
Form 5.9	Evaluation of Low Emission Transfer Equipment	5-28
Form 6.1	Evaluation of Physical Protection and Other Measures	6-1
Form 6.2	Ignition Source Control Assessment	6-2
Form 6.3	Separation Distances between Containers and Buildings, Property Line, etc.	6-3
Form 6.4	Separation Distances between Points of Transfer and Other Exposures	6-4
Form 6.5	Special Protection Measures, Passive Systems	6-5
Form 6.6	Special Protection Measures, Active Systems	6-6
Form 6.7	Protection Against Vehicular Impact	6-6
Form 7.1	Types of Occupancies Near or Surrounding the LP-Gas Plant	7-3
Form 7.2	Exposure to LP-Gas Plant from External Hazards	7-4
Form 8.1	Data on the Responding Fire Department	8-2
Form 8.2	Response Time Data for the Fire Departments	8-4
Form 8.3	Water Flow Rate and Total Water Volume Required to Cool Containers Exposed to a Fire	8-5
Form 8.4	Evaluation of Water Availability in or Near the LP-Gas Facility	8-7
Form 9.1	Analysis Summary on Product Control and Local Conditions of Hazard	9-1
Form 9.2	Analysis Summary on Exposure From and to the LP-Gas Facility	9-2
Form 9.3	Analysis Summary on Fire Department Evaluations	9-3

Form 9.4	Redundant and Fail-Safe Design for Containers	9-5
Form 9.5	Low Emission Transfer Equipment	9-6
Form 9.6	Special Protection Measures –Passive Systems	9-7
Form 9.7	Special Protection Measures –Active Systems	9-7

List of Tables

Table 3.1	Description of the Various Steps in Performing the FSA	3-3
Table 5.1	Container Size Dependant Evaluations	5-1
Table 7.1	Distances to Various Types of Propane Hazards Under Different Release Models	7-2
Table 9.1	Suggested Alternative Methods for Industrial and Bulk Plants That Do Not Pose a Hazard But Lack a Water Supply	9-8
Table B-1	LPG Release Cases for Hazard Assessment	B-2
Table B-2	Distances to LFL Concentrations and Hazard Areas	B-4
Table B-3	Various Parameters and their Values Used in the Cases	B-6
Table B-4	Thermodynamic Properties of Propane	B-7
Table B-5	Calculation of the Mass Fraction of LPG and n-Butane	B-9

List of Figures

		Page #
Figure 5-1	Schematic Representation of the NFPA 58 Requirements for Product Control Appurtenances on Containers of Water Capacity Less Than or Equal to 2,000 Gallons, With Different Service Configurations	5-4
Figure 5-1A:	Single Vapor Service Line in a Manifolded Configuration	5-4
Figure 5-1B:	Regulator in the Vapor Service Line	5-5
Figure 5-1C:	Container with both Liquid and Vapor Service, Regulator in the Vapor Service Line	5-6
Figure 5-1D:	Container Feeding Liquid to a Vaporizer	5-7
Figure 5-1E:	Vertical Container for Liquid Service	5-8
Figure 5-2	Vapor Inlet Appurtenances on Containers of Water Capacity Greater Than 2,000 Gallons	5-13
Figure 5-3	Vapor Outlet Appurtenances on Containers of Water Capacity Greater Than 2,000 Gallons	5-14
Figure 5-4	Liquid Inlet Valves on Containers 2,001 through 4,000 Gallons Water Capacity	5-15
Figure 5-5	Liquid Outlet Valves on Containers 2,001 through 4,000 Gallons Water Capacity	5-16
Figure 5-6A	Liquid Inlet Valves on Containers with Water Capacity Greater Than 4,000 Gallons in New Bulk Plants and Industrial Plants	5-19
Figure 5-6B	Liquid Inlet Valves on Containers with Water Capacity Greater Than 4,000 Gallons in Existing Bulk Plants and Industrial Plants	5-20
Figure 5-7A	Liquid Outlet Valves on Containers with Water Capacity Greater Than 4,000 Gallons in New Bulk Plants and Industrial Plants	5-21
Figure 5-7B	Liquid Outlet Valves on Containers with Water Capacity Greater Than 4,000 Gallons in Existing Bulk Plants and Industrial Plants	5-22

CHAPTER 1

Introduction

1.1 Background

The Fire Safety Analysis (FSA) is a self-conducted audit of the safety features of a propane installation and an assessment of the means to minimize the potential for inadvertent propane releases from storage containers and during transfer operations. The assessment also includes an evaluation of the capabilities of local emergency response agencies as well as an analysis of potentially hazardous exposures from the installation to the neighborhood and from the surroundings to the LP-Gas facility.

Since 1976, NFPA 58, *Liquefied Petroleum Gas Code* (hereinafter referred to as the "Code" or "NFPA 58") has required that a facility operator or owner conduct a FSA for propane facilities having ASME containers of aggregate storage greater than 4,000 gallons water capacity. The FSA requirement was changed in the 2001 edition to require a written FSA. The requirements for fire protection are indicated in the 2008 edition of NFPA 58 in § 6.25. Specifically §6.25.2 ("Planning") and §6.25.3("Protection of ASME Containers") require the following:

6.25.2.1 The planning for the response to incidents including the inadvertent release of LP-Gas, fire, or security breach shall be coordinated with local emergency response agencies.

6.25.2.2 Planning shall include consideration of the safety of emergency personnel, workers, and the public.

6.25.3.1 Fire protection shall be provided for installations with an aggregate water capacity of more than 4000 gal (15.1 m^3) and for ASME containers on roofs.

6.25.3.2 The modes of fire protection shall be specified in a written fire safety analysis for new installations and for existing installations that have an aggregate water capacity of more than 4000 gallons and for ASME containers on roofs. Existing installations shall comply with this requirement within 2 years of the effective date of this code.

6.25.3.3 The fire safety analysis shall be submitted by the owner, operator, or their designee to the authority having jurisdiction and local emergency responders.

The FSA and required assessment of the installation provides several important benefits:

1) A structured assessment by which each facility can be evaluated for conformity of installed equipment with Code requirements.

2) A means to evaluate the capability of systems and equipment installed to control and contain potential LP-Gas releases during day-to-day operations.

3) An approach to evaluate the informational needs of the facility, based on factors such as the type and frequency of transfer operations, size of the storage containers, location of

the facility with respect to other buildings and the existing procedures and systems in place.

4) A means to describe product control and fire protection features which exceed the comprehensive requirements of NPFA 58[1].

5) A tool for facilitating a cooperative and effective dialogue with local emergency response agencies and authorities having jurisdiction.

1.2 Scope of the Manual

The manual addresses a number of subjects, including:

(1) A review of the product control measures required in the NFPA 58, "Liquefied Petroleum Gas Code"
(2) Local conditions of hazards within the facility site
(3) Exposures to and from other properties
(4) Effectiveness of local fire departments
(5) Effective control of leakage, fire and exposure
(6) Illustrative examples using four different sizes of typical LP-Gas facilities

This FSA manual is intended for use by propane plant owners or operators, consultants, authorities having jurisdiction (AHJs) and emergency response personnel. The manual addresses the process by which a FSA can be conducted for a LP-Gas facility containing one or more stationary ASME containers.

The FSA manual is designed to provide a guide for identifying the requirements in NFPA 58 and determining compliance with them. Section 6.23.3.5 of NFPA 58 provides, in part, that:

> The fire safety analysis shall be an evaluation of the total product control system, such as the emergency shutoff and internal valves equipped for remote closure and automatic shutoff using thermal (fire) actuation, pull away protection where installed, and the optional requirements of Section 6.26.

The philosophy of NFPA 58 is to minimize fires by minimizing the accidental release of propane if an incident should occur. Or put in simple terms, "no fuel, and no fire."

The manual **does not** address the following:

1. Marine terminals, refrigerated LP-Gas storage and the transportation of LP-gas by either rail tank cars or by cargo tank trucks. Marine terminals are governed by the OSHA Process Safety Management regulations and the US EPA Risk Management Plan regulations; refrigerated storage of LP-gas is a high-volume operation requiring special

[1] All reference, henceforth, to the pamphlet or the "code" in this document should be construed as referring to NFPA 58, 2008 edition.

considerations; and, the transportation of LP-gas is addressed by Title 49 of the Code of Federal Regulations, *Transportation*.[i]

2. Storage of LP-Gas in salt domes and caverns.
3. Installations ASME LP-gas containers on roofs of buildings. This type of installation, for which a fire safety analysis is required, is excluded from the scope of this manual primarily because of the rarity of such installations in the United States.
4. Cylinder filling operations at a dispensing facility, unless the storage threshold for LP-Gas has been exceeded, requiring an FSA to be prepared.
5. The use of facility employees performing as a "fire brigade."

The above facilities may be required to comply with other safety analysis requirements.

1.3 Need for a FSA Manual

Neither NFPA 58 nor the "Liquefied Petroleum Gas Code Handbook"[3ii] provide detailed guidance on how to prepare or develop a written FSA. Since each facility or bulk storage plant presents unique physical and operational characteristics, the fire safety analysis is a tool used to assess the level of fire safety performance that a specific facility or bulk plant can be expected to provide. This FSA will also provide essential information on the facility and its operation to the local authority having jurisdiction (AHJ) and local emergency response agency.

An informal survey was taken of AHJ's on the fire safety analyses used for existing and new plants in their jurisdictions (conducted by the author) at the time the first edition of this manual was being prepared. It indicated that there was no uniformity either in content, the details of information, or final assessment of the facility in the FSAs submitted. They ranged from a single page submission for medium size bulk plant to very detailed assessment including risk assessment and management plan for a 30,000 gallon bulk storage facility. Without a guidance manual, potential confusion would almost certainly occur as each AHJ would be required to establish an individual set of criteria that would meet the FSA in their area. Thus, the need in the LP-Gas industry for assistance with the following tasks was clearly established.

1) Providing a FSA template that allows for consideration of different size installations
2) Establishing a uniform approach and defining common elements
3) Developing simplified checklists and an example-based methodology for completing the analysis
4) Utilizing technically-based guidance and support

The intent of this FSA manual is to provide an easy-to-use procedure for LP-gas facility owners or operators who are most familiar with the equipment technology and system operations and therefore qualified to complete the document. Knowledge of fire science and engineering principles is not required for this document to be useable by an owner, operator or an AHJ, because those principles have already been factored into the assessment criteria contained within the FSA.

By utilizing the expertise of industry, engineering and fire service representatives in the development of the material to follow, this manual provides a comprehensive, uniform, objective

approach that was designed to provide for the uniform and objective application of FSA requirements by the AHJs. Further, the joint input of the Propane Education & Research Council (PERC), National Propane Gas Association (NPGA), and the National Fire Protection Association (NFPA) provides additional assurance of the manual's depth, credibility and broad-based consensus.

This FSA manual has been developed based on the requirements of NFPA 58, 2008 edition. Using this manual to perform a FSA at a facility constructed to meet the requirements of prior editions of NFPA 58 or other State specific Codes may produce conflicts between actual facility construction and the checklists in this manual. The code or standard in effect at the time of construction of the facility should be used as the source of requirements to perform the FSA. Checklist items contained within this manual can be revised to indicate the appropriate code items required at the time of facility construction.

1.4 LP-Gas Safety Record and Risks

The LP-Gas industry has a long history of safe operations. With the requirement in the 1976 edition of NFPA 58 to retrofit LP-Gas plants with emergency shut-off valves (ESVs) in transfer lines, the safety of LP-Gas facilities was further improved.

The FSA provided in this manual, in addition to other safety programs currently enacted at any workplace, is intended to reduce or eliminate the risk of fatality or injury to both the plant employees and the public. In an effort to identify the level of risk a propane installation poses to the general public, as well as employees and emergency responders, the U.S. Department of Energy (DOE) instituted a study[iii] in 1981. Accident data from a variety of sources was analyzed, including: the US Department of Transportation hazardous material incident report database, reports of the National Transportation Safety Board, National Fire Protection Association, technical journals and other sources. Data analyzed for the period 1971 through 1979 addressed LP-Gas transportation and product releases from stationary storage facilities. The special focus of the study was the fatalities suffered by employees and the general public. The study concluded that a fatality to the general public as a direct result of an LPG transportation or storage incident involving the loss of product is very small and the risk (expressed in expected number of fatalities per year) is smaller than that from natural phenomena (lightning, tornadoes, objects falling from the sky, etc).

An analysis conducted by the National Fire Protection Association[iv] of LP-Gas fire damage and casualty data during the period between 1980 and 1999 also indicates that the LP-Gas storage facility operations in the US are very safe. The number of reported fires at LP-Gas bulk storage facilities remains small and has fallen since 1980, but substantial variation exists from year to year. During the five-year period from 1994 through 1998, an estimated 49 fires, on average, were reported per year at LP-Gas bulk storage facilities. These fires caused an annual average of one civilian death, five civilian injuries and $754,000 in direct property damage. In 1999, an estimated 58 reported fires on these properties caused four civilian injuries and $722,000 in direct property damage. The 58 fires reported in 1999 accounted for .003% of all fires reported that year.

1.5 Organization of the FSA Manual

The manual has been organized to address the requirements outlined in NFPA 58 (§ 6.25) and Appendix A (§ A6.25.3).

Chapter 2 discusses the requirements of the 2008 edition of NFPA 58 in regard to product control requirements, and their evolution. The philosophy and the advantages of product control systems are discussed. Also included are the various appurtenances used in a typical LP-Gas facility. More detailed information on the types of valves, their functions and example photographs of various appurtenances are provided in Appendix B. Chapter 3 provides an overview of the FSA process including its principal elements.

The input of data into the FSA procedure begins with Chapter 4. In Chapter 4 basic information about the LP-Gas facility is input into appropriate tables and a decision is made (based on the data provided) as to the extent of the analysis that should be completed. The assessment of conformity with Code requirements of the product control requirements for containers and in transfer piping is performed in Chapter 5. To aid this assessment a series of sketches of possible configurations of container appurtenances (satisfying 2008 Code requirement) are provided. When necessary, the year when specific equipment was required by the Code is also indicated on the sketches to facilitate application of the Manual to facilities constructed to the requirements in previous editions of NFPA 58. The analysis of the local conditions of hazard is presented in Chapter 6, followed by the assessment in Chapter 7 of the hazard exposure to off-site properties and persons. Also, the potential exposure to LP-Gas installations from off-site activities is covered in Chapter 7.

The evaluation of the capabilities of the local emergency responder (usually the fire department) and the availability of water to fight in-plant fires and exposures are presented in Chapter 8. Summary of evaluations and actions that may need to be initiated for proposed LP-Gas facilities are presented in Chapter 9. The use of this manual in preparing a written FSA for a LP-Gas facility is demonstrated with examples of four different generic cases. Several different sizes of facilities are considered.

A set of blank forms required to perform a FSA is provided in Appendix A. The results of calculating the hazard distances for a set of credible LP-gas release scenarios are provided in Appendix B. Also provided in Appendix B are the thermodynamic properties of propane and the values of other parameters used in calculating the hazard distances.

---

[i] U. S. Code of Federal Regulations, Title 49, Transportation
[ii] Liquefied Petroleum Gas Handbook, Lemoff, 2008, NFPA, Quincy MA
[iii] LPG Land Transportation and Storage Safety, Department of Energy report No. DOE/EV/06020-TS 9/18/81"
[iv] *Fires at LP-Gas Bulk Storage Plants Statistical Analysis*, NFPA, 2003, Quincy, MA

CHAPTER 2

LP-Gas Storage Container Safety Features

The fundamental premise on which the requirements for LP-Gas facility safety specified in several recent editions of NFPA 58 pamphlets are based is the following:

> **If product release can be either controlled or eliminated, safety is effectively addressed.**

A product release creates the potential for the occurrence of a fire. Therefore, the focus of both NFPA 58 and the Fire Safety Analysis Manual is on the need to design systems (incorporating product controls) to ensure, to the extent possible with current technology and procedures, the elimination of the accidental release of LP-gas from storage or during transfer operations.

2.1 A Historical Perspective

In the late 1960's and the early 1970's there were a number of fires and BLEVE (Boiling Liquid Expanding Vapor Explosions) of propane and other liquefied petroleum gases resulting from derailments of railcars carrying propane and other flammable liquefied gases. These incidents involved fire fighter fatalities and highlighted the need for safety improvements. As a result, the U. S. Department of Transportation (DOT) implemented new regulations for the tank cars used to transport propane and other liquefied flammable gases, and made them mandatory and retroactive in 1980. These improvements included:

- Head shields to reinforce the pressure vessel on the railcar
- "Shelf" couplers to reduce the potential for railcars to be uncoupled during a derailment
- Thermal protection to reduce the potential for the tank to experience a rise in temperature due to flame impingement

Since these improvements in rail car safety were made in the 1980's, there have been no firefighter fatalities from any railroad tank car BLEVEs and the number of these incidents has been greatly reduced, to the authors' knowledge.

In 1973, product control requirements to prevent the uncontrolled release of LP-gas from storage containers consisted primarily of manually operated valves, back-flow check valves and excess-flow check valves.

On July 3, 1973 a propane incident occurred in Kingman, Arizona involving a propane fire at a propane tank car unloading area in a propane bulk storage plant. Though the plant's equipment conformed to the requirements of NFPA 58 and other safety standards for flammable materials at that time, the incident resulted in the death of several firefighters and one plant employee.

A direct result of this incident (and others that occurred at approximately the same time) was the addition of a new fire protection requirement in the 1976 edition of NFPA 58. The requirement stated that planning "for the effective measures for control of inadvertent LP-Gas release or fire[i]" shall be done and coordinated with local emergency responders. In addition, the primary consideration of a fire safety analysis at that time was the use of water as a suppressing agent to control fires. The requirements today are very similar to those original requirements except in two areas.

- As of the 2001 edition, fire safety analyses are required to be written;
- The primary consideration in performing such an analysis has changed from the emphasis of using water for fire control to the emphasis of avoiding product release altogether using technology and training.

This modern approach takes advantage of the inherent safety present in a controlled environment such as a bulk plant, as well as the safety features of the most current product control hardware.

In early editions of NFPA 58, the primary consideration of water as the means to control a fire was based on the fact that at that time, there were few reliable ways to stop the flow of LP-gas after failures in the system and the need to apply water quickly to storage containers being impinged by flames was important.

Another significant change in the 1976 edition of NFPA 58 was the requirement for including an Emergency Shutoff Valve (ESV) in the transfer lines used between stationary storage containers of over 4,000 gallons capacity and cargo tank vehicles. This revision was intended to prevent product release from storage containers in the event of a vehicle pulling away with its hoses still connected. All existing plants were required to comply with this requirement by the end of 1980. Since this retrofit program was completed, there has not been, to the knowledge of the authors, a pull-away accident involving an ESV installation that resulted in serious consequences.

The 1980's enjoyed a reduced number of propane incidents in the U. S., and the next major product control enhancement was the revision to introduce an optional requirement for internal tank valves in containers over 2,000 gallons in the 1992 edition of NFPA 58. These tank valve requirements included:

Vapor and Liquid Withdrawal Openings in Tanks
1. Positive shutoff valve in line with excess flow valve installed in the tank, or
2. Internal valve with integral excess flow shutoff capability

Vapor and Liquid Inlet Openings in Tanks
1. Positive shutoff valve in combination with either an excess flow valve or backflow check valve installed in the tank, or
2. Internal valve with integral excess flow valve, or
3. Internal valve with remote means of closure

These revisions were made to enhance the operational features of product control hardware. Internal valves are capable of being closed from a remote location (using a cable, pneumatic, or hydraulic device) and by thermal activation, which is accomplished using an element that melts when it is subjected to fairly moderate temperatures (in the 200ºF - 250º F range).

The 2001 edition of NFPA 58 was further revised to require internal valves for liquid connections to containers over 4,000 gallons, with remote and thermal shutoff activation. This change was the result of the Committee desiring improved safety performance with this advanced hardware, due to the following incidents:

- **Sanford, NC**. A hose separation resulted in the loss of the contents of a transport vehicle (9700 gallons water capacity). The contents within the storage containers were also lost because of a failed check valve.
- **Albert City, Iowa**. An exposed liquid pipe installed in violation of the code between an 18,000 gallon water capacity storage container and a vaporizer was broken when a recreational vehicle accidentally drove over it. The leaking gas found a source of ignition and impinged on the container, resulting in a BLEVE.
- **Truth or Consequences, NM**. A small, parked truck rolled into a propane bulk storage plant, breaking plant piping. The resulting fire caused the failure of several cylinders.

These improvements in product control are considered critically important, and in addition to requiring them for all new installations after 2001, the requirements were made retroactive to all existing installations, allowing 10 years for the conversion. All existing containers over 4,000 gallons water capacity will be retrofit with an internal valve or similar protection on all liquid connections. Alternatively, the use of an Emergency Shutoff Valve (ESV) as close to the container as practical is also allowed, in recognition that some containers cannot accommodate an Internal Valve without extensive modification. The ESV has the same remote and thermal activation closing features as an internal valve.

2.2 Current LP-Gas Storage Container Safety Features

As of the 2001 edition, NFPA 58 requirements for product release control include the provision for a number of different types of valves or appurtenances in the product storage containers, transfer piping network and at liquid transfer facility locations. Generally, code requirements for product control appurtenances on containers used in industrial plants and bulk plants are more stringent than for residential and commercial use containers.

Unless product is being transferred, product control valves are normally in the closed position. However, some of the installations require an automatic shut off feature when either a fire (or heat) is sensed or when other abnormal conditions occur. The product control valves include the following:

Positive shut off valve: A manually operated shutoff valve used to control the flow of propane.

Back flow check valve: This valve allows flow in one direction only and is used to allow a container to be filled while preventing product from flowing out of the container.

Excess flow valve[(i)]**:** A valve designed to close when the liquid or vapor passing through it exceeds a prescribed flow rate.

Internal valve[(ii)]: A container primary shutoff valve having the following features: (1) The seat and seat disc remain inside the container so that damage to parts exterior to the container or mating flange does not prevent effective sealing of the valve. (2) The valve is designed for the addition of a means of remote closure and is also designed for automatic shutoff when the flow through the valve exceeds its rated maximum flow capacity or when pump actuation differential pressure drops to a predetermined point.

Emergency shut off valve[(iii)]**:** A shutoff valve incorporating thermal and manual means of closing the valve that also provides for a remote means of closing.

Hydrostatic pressure relief valve: A type of relief valve that is set to open and relieve pressure in a liquid hose or pipe segment between two shutoff valves when the pressure exceeds the setting of the valve.

Container pressure relief valve: A type of pressure relief device designed to open and then close to prevent excess internal fluid pressure in a container without releasing the entire contents of the container. The valve is located in the vapor space of the container.

Bulk storage installations incorporate several product release control appurtenances. This fire safety analysis manual outlines alternative schematics for the various facilities covered (2,000 gallons or less; 2,001 gallons through 4,000 gallons; and, greater than 4,000 gallons water capacity).

(i) NFPA 58, Standard for the Storage of Liquefied Petroleum Gases, 2008 edition, §3.3.74.2
(ii) ibid, § 3.3.74.4
(iii) ibid, § 3.3.74.1

CHAPTER 3

Principal Elements of the Fire Safety Analysis

The principal elements of the Fire Safety Analysis (FSA) required by NFPA 58 (in §6.25, and container protection requirements in §6.25.3) are described in this chapter. This manual for performing the FSA addresses the following LP-Gas facility-related items:

1. Effectiveness of Product Control measures
2. Local conditions of hazard within the container site, including congestion within the site
3. Exposure to off-site properties and populations and the impact of neighboring industrial activity on the facility
4. Effectiveness of the local Fire Department that may respond to an emergency within the facility
5. Requirements for and availability of adequate water supply
6. Full compliance with Code requirements for existing LP-Gas facilities and corrective actions to be implemented for a proposed facility to address any deficiencies

The details of how each of the above items is evaluated in performing the FSA are indicated in Chapter 4 though Chapter 9. Shown below is a brief review of the various steps involved in conducting the FSA.

3.1 Important Steps in Conducting the Analysis

The development of a Fire Safety Analysis (FSA) involves a number of important steps. These steps are indicated in Table 3.1. Also shown in Table 3.1 are the chapters in this manual where the referenced analyses steps are discussed in detail.

Each set of FSA requirements is presented in one or more tables and fill-in forms. The tables provide either factual information or calculated results; the user obtains information from the tables for further analyses. The fill-in forms specify NFPA 58 requirements or other assessment parameters, and provide two columns, one with a “Yes” column heading and the other with a “No” heading. In some cases either schematic or pictorial representations are provided to clarify a requirement. The fill-in forms require some information input from the user, either checking a “Yes” column or a “No” column or writing a numerical value. Also provided are notes under each table or fill-in form, which explains conditions, if any, associated with the table or the form or how a calculation is performed for entering data into the form.

Appropriate explanations are provided in the text either preceding a form or after the form, if any action is necessary depending upon the values/contents in the forms. A blank copy of each form presented in Chapter 4 through Chapter 9 is provided in Appendix A. These can be reproduced and used for any number of LP-Gas facilities.

The FSA for a LP-Gas facility is conducted by systematically completing the forms in Chapter 4 through Chapter 9. The person completing the FSA must indicate a "Yes" or "No" in the appropriate column for each requirement, depending upon whether the LP-Gas facility fulfills the specific requirement. Any items, which may need to be undertaken to correct a deficiency in a proposed (as opposed to existing) LP-Gas facility are referred to in Chapter 9.

Once the FSA is complete the forms, together with information about the facility, can be filed to satisfy the "written" requirement of NFPA 58, §6.25.3.2 & 6.25.3.3. Any emergency planning for the facility is required to be coordinated with the local fire department or equivalent responding authority (§ 6.25.2.1).

3.2 Completing the FSA

Chapters 4 through 9 provide a framework with which the Fire Safety Analysis can be conducted to satisfy the requirements of NFPA 58. It is important to note the following in performing the analysis using the tables, fill-in forms and steps indicated in the following chapters.

1. All references to the "Code" in this manual are to the 2008 edition of the NFPA 58 "Liquefied Petroleum Gas Code."

2. If a LP-Gas facility was built to satisfy the requirements of an earlier edition of NFPA 58, then only the requirements from the earlier edition need to be satisfied when performing the FSA using this manual. If an appurtenance or other requirement is specified in one or more of the forms in this manual (developed based on the 2008 edition), and this requirement was not in the edition to which the facility was built, then it is recommended that the "Yes" and "No" column corresponding to the particular appurtenance or requirement be left blank or marked "NA," to signify the requirement is not applicable to the facility in question.

3. If the facility for which the analysis is being performed was constructed to satisfy the requirements of a previous edition of NFPA 58, it must still comply with all requirements that have been made applicable retroactively in later editions of the code, through the 2008 edition. Such retroactive provisions are indicated where they are applicable.

Table 3.1
Description of the Various Steps in Performing the FSA

Step #	FSA Steps	Chapter where described
1	Gather data on the volume of LP-Gas stored and other information pertinent to the facility.	Chapter 4
2	Perform simple calculations and determine whether the facility is subject to the requirements for developing an FSA.	
3	Evaluate the product control appurtenances and other safety features of the facility relative to the requirements of the NFPA 58 Code.	Chapter 5
4	Assess the appurtenance requirements for containers of different capacities and compare them to the actual installation.	
5	Evaluate the requirements for valves on transfer piping and compare them to the valves provided in the facility.	
6	Assess conformance to the Code of a Redundant and Fail-Safe Product Control System, if such a system is provided in the facility.	
7	Evaluate the Code conformance of the Low Emission Transfer Equipment if installed in the facility.	
8	Analyze the protection measures against local conditions of hazard. That is, assess whether all requirements of the Code for the physical protection of containers and transfer piping are implemented.	Chapter 6
9	Analyze the Code requirements for the control of ignition sources and whether these requirements are complied with.	
10	Assess conformance to the code requirements for separation distances between (i) containers of different sizes and property and, (ii) LP-Gas transfer points and other exposures.	
11	Evaluate conformance to the Code requirements for Special Protection Systems, if they are provided on containers in the facility.	
12	Evaluate the potential hazards to off-site populations and property from propane releases in the facility. This step includes selecting credible LP-Gas release scenarios and assessing the distance (and area) over which the hazard exists.	Chapter 7
13	Assess whether any off-site populations, especially people in institutional occupancies, are potentially subject to the LP-Gas release hazards	
14	Evaluate whether there exists a hazard from other industrial operations around the LP-Gas facility	
15	Evaluate the effectiveness of the local Fire Department, including the availability and capability of response personnel, training level, equipment and response time to an emergency in the facility.	Chapter 8
16	Evaluate the amount of water needed to cool containers exposed to a fire and the adequacy of the facility (or locally available) water supply.	
17	For a proposed facility, develop corrective actions to address deficiencies found.	Chapter 9 (Only applicable for proposed facilities)
18	Assess, based on specific criteria, the need to provide Redundant and Fail-Safe Product Control Systems.	
19	Assess, based on specific criteria, the need to provide Low Emission Transfer Systems.	
20	Assess when Special Protection Systems are needed	
21	Evaluate alternative approaches to using water in a special protection system	

CHAPTER 4

Facility Information

In this chapter basic information on the LP-Gas facility is recorded and a decision is made on whether the facility is required to have a completed Fire Safety Analysis (FSA) performed. If it is determined that a FSA is required, additional information on the facility is recorded.

4.1 Initial Data for the LP-Gas Facility

Complete Form 4.1 to provide basic information on the facility.

Form 4.1
Initial Data on the LP-Gas Facility

A	B	C
Item #	**Information Item**	**Data**
1	Name of the LP-Gas Facility Owner or Operator	
2	Contact Name:	
3	Contact Telephone & Fax Numbers	
4	Contact Email Address	
5	Mailing Address	Street 1:
		Street 2:
		City, State, Zip:

4.2 Facility Storage Capacity and Other Details

Complete Form 4.2. Multiply Column B by its corresponding entry in Column C, write the answer in the corresponding cell in Column D, then sum all the entries in Column D and write it in Row 2, Column D. This number is the “Aggregate Water Capacity” of the facility.

Form 4.2
Facility Storage Capacity [1,2,3]

A	B	C	D
Item #	**Individual Container Water Capacity (w.c.) (gallons)**	**Number of containers**	**Total Water Capacity (w.c.) of each container size (gallons)**
1	500		
	1,000		
	2,000		
	4,000		
	10,000		
	18,000		
	30,000		
	60,000		
	Other:		
	Other:		
	Other:		
	Other:		
2	**Aggregate Water Capacity[4]**		

Notes:
(1) Column D = Column B x Column C.
(2) Parked bobtails, transports and tank cars should not be considered for aggregate capacity calculations.
(3) Do not consider containers that are not connected for use.
(4) For the purpose of this manual, "Aggregate Water Capacity" means any group of single ASME storage containers separated from each other by distances less than those stated in the aboveground containers column of Table 6.3.1.

If the aggregate water capacity of the LP-Gas facility is less than or equal to 4,000 gallon (w.c.), no further assessment is required.

YOU CAN STOP HERE.

If the aggregate water capacity of the facility is greater than 4,000 gallons, continue the analysis.

If the aggregate (water) storage capacity of the facility exceeds 4,000 gallons, complete the remainder of the forms below.

4.3 Additional Facility Information

Complete Form 4.3 below and record additional information on the facility.

Complete also the remainder of Fire Safety Analysis indicated in Chapter 5 through Chapter 8 (plus Chapter 9 for proposed facilities).

Form 4.3
Additional Information on the LP-Gas Facility

☐ Existing Facility built to NFPA 58 Edition _____ ☐ Proposed Facility

a) Name of the Facility (if applicable) _____

b) Type of LP-Gas Facility ☐ Commercial ☐ Industrial ☐ Bulk Plant

c) Facility is located in ☐ Rural Area, ☐ Suburban Area, ☐ City Commercial Zone
☐ City Industrial Zone

d) Facility neighbors[⊥]: ☐ Agri. fields ☐ Commercial Bldgs. ☐ Flammable Liquids Storage
(Check all that apply) ☐ Industrial Activity (metal fabrication, cutting and welding, etc)
☐ Manufacturing ☐ Others (explain) _____

e) Geographic Location of Facility/Address: _____
_____

f) Landmarks, if any: _____
_____

g) LP-Gas liquid supply by: ☐ Bobtail ☐ Truck Transport ☐ Rail Tank Car
(Check all that apply) ☐ Pipeline

h) LP-Gas Distribution by: ☐ Bobtail ☐ Truck Transport ☐ Vapor Piping
(Check all that apply) ☐ Liquid Piping ☐ Dispensing or Vehicle Liquid fueling

i) Number of Vehicle Entrances: ☐ One ☐ Two ☐ More than two

j) Type of Access Roads to the Facility ☐ Rural ☐ City or Town ☐ Highway
(One check per line) Entrance 1 ☐ Dirt road ☐ Gravel road ☐ Paved
(One check per line) Entrance 2 ☐ Dirt road ☐ Gravel road ☐ Paved

k) Staff presence ☐ Not staffed ☐ Only during transfer operations
☐ Staffed always (24/7) ☐ Only during business hours
☐ Other (Explain) _____

l) Location and distances to Assembly, Educational or Institutional Occupancies surrounding the facility, if any, within 250 ft from the facility boundary in the direction of the assets.
_____
_____

m) Overview plot plan of the facility attached? ☐ Yes ☐ No

§ All properties either abutting the LP-Gas facility or within 250 feet of the container or transfer point nearest to facility boundary.

CHAPTER 5

Analysis of Product Control Measures In Containers and Transfer Piping

5.1 Product Control Measures in Containers

NFPA 58 requires the installation of several product control safety devices both on containers and in transfer piping to minimize the accidental release of LP-Gas, either liquid or vapor. The requirements for product control equipment depend on the following:

- The size of individual containers;
- Whether the containers in a facility are individually filled or filled through a common liquid manifold,
- Whether the product is transferred from the storage container as a liquid or vapor (or both).

A facility may have LP-Gas containers of different sizes; it is therefore necessary to evaluate compliance with the Code requirements on a container-by-container basis as well as on a facility basis.

In this chapter, the appurtenance requirements of the Code are listed for LP-Gas containers of different sizes and configured for different types of service. A series of forms are provided which indicate the Code-required product control hardware for container and facility piping. The forms also provide space to record the product control equipment actually installed on the containers as well as transfer piping at the facility. These forms must be completed as a part of this Fire Safety Analysis.

Complete Form 5.1, depending upon the size of the individual containers in the facility. Then, perform an analysis of the product control appurtenances for each container located in the facility.

Table 5.1
Container Size-Dependent Evaluations

If the LP-Gas facility contains individual containers in the volume range (gallons w.c.)		Perform the analysis specified in Section
Greater than	And Less than or equal to	
0	2,000	5.1.1
2,000	4,000	5.1.2
4,000	-	5.1.3

NOTE: While the schematics of various container service configurations provided in this manual show separate product control valves (such as manual shutoff, excess flow, back check, etc.) on containers, multipurpose valves are also allowed. Multipurpose valves combine the functions of two or more valves. For the purposes of this FSA consider each function in the multipurpose valve as a separate valve for completing the forms.

5.1.1 Individual Containers of Water Capacity less than or equal to 2,000 gallons

Containers of 2,000 gallons water capacity (w.c.) or less can be configured with product control appurtenances in a number of different ways. These are schematically illustrated in Figures 5-1A through Figure 5-1E. *Note: Container appurtenances shown are illustrative of product control equipment only. See NFPA 58 for all container appurtenances required. Illustrations are not intended to be used for system design purposes*

Complete the following steps using the schematics in Figure 5-1A through Figure 5-1E

1. Select the first container at the facility, which has a water capacity of 2,000 gallons or less. Enter this as container number 1 in Column A of Form 5.1, below.
2. Review each of the service configurations given in Figure 5-1A through Figure 5-1E. Select the schematic that most closely represents the configuration in the facility for this container. Enter the figure number of the configuration selected for this container in Column B.
3. Count the total number of "Yes" shown in this configuration. This represents the number of required appurtenances for the specific configuration. Enter this number in column C of Form 5.1.
4. Check "Yes" under each appurtenance that is actually installed on the container. If the appurtenance is not provided, then check "No."
5. Count the number of boxes checked "Yes." Enter this number in Column D of Form 5.1.
6. Repeat steps 1 through 5 for each container of 2,000 gallons water capacity or less at the facility.

Form 5.1

Compliance with Code Requirements for Appurtenances on Containers of 2,000 Gallons Water Capacity or Less

A	B	C	D	E
Container #	**Service Configuration Sub Figure (in Figure 5-1)**	**Number of Product Control Appurtenances**		**NFPA 58 Section Reference (2008 edition)**
		Required by NFPA 58 (applicable edition)	**Installed on the Container**	
1				5.7.4.1 and Table 5.7.4.1
2				
3				
4				
5				
6				

If, in Form 5.1, any one of the numbers in column D is less than the number in Column C of the corresponding row, then these items must be addressed and brought into compliance with the specific edition of NFPA 58 that the facility was constructed to.

Figure 5-1
Schematic Representation of the NFPA 58 Requirements for Product Control Appurtenances on Containers of Water Capacity Less Than or Equal to 2,000 Gallons, With Different Service Configurations

(Note: Container appurtenances shown are illustrative of product control equipment only. See NFPA 58 for all container appurtenances required. Illustrations are not intended to be used for system design purposes)

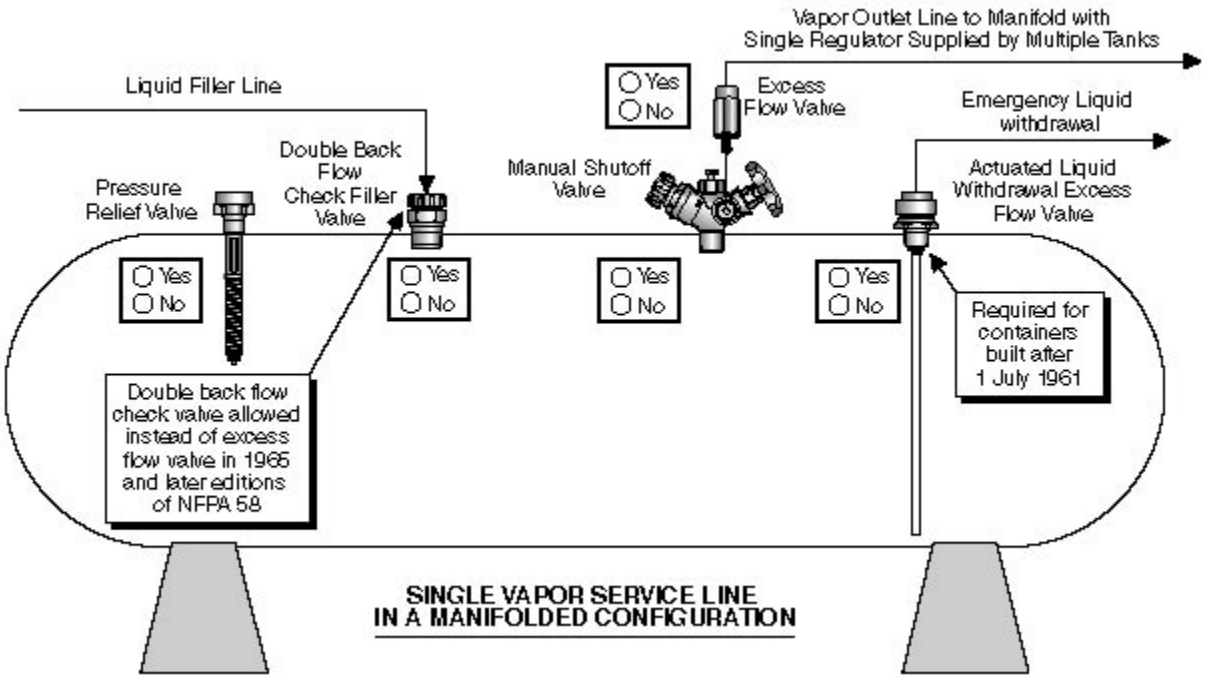

Figure 5-1A: Single Vapor Service Line in a Manifolded Configuration

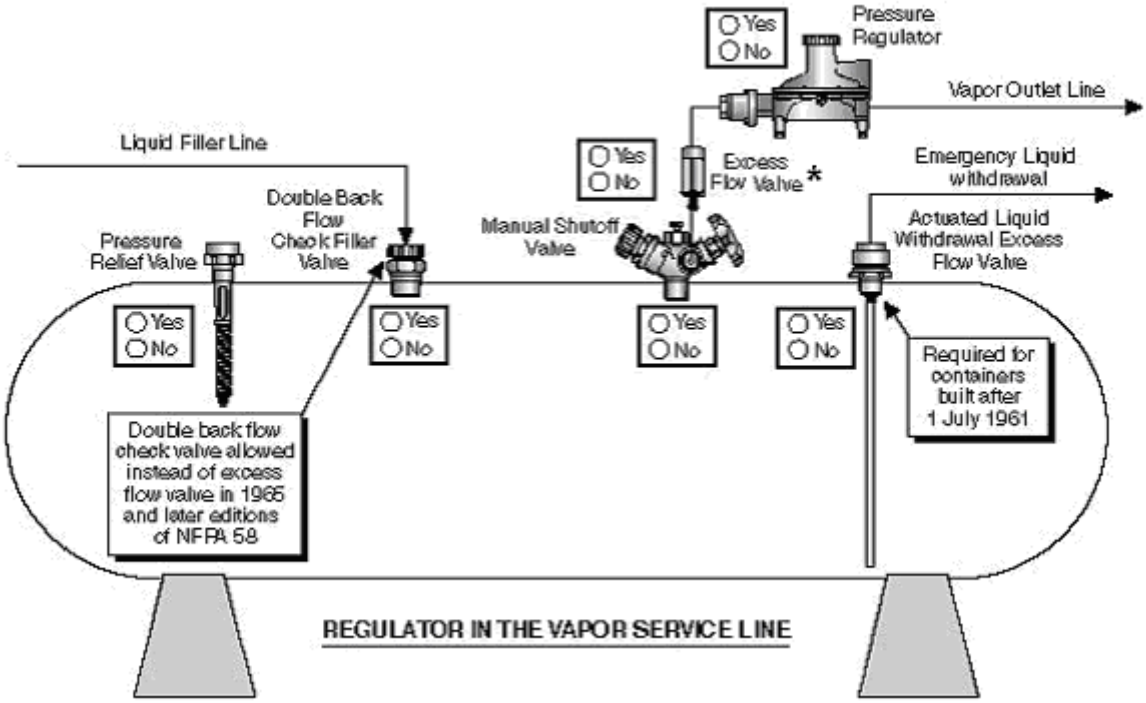

Figure 5-1B: Regulator in the Vapor Service Line

*** Excess-flow protection is not required for manual shutoff valves for vapor service where an approved regulator is directly attached or attached with a flexible connector (*"pig tail"*) to the outlet of the manual shutoff valve for vapor service, and the controlling orifice between the container contents and the shutoff valve outlet does not exceed 5/16 inch (8 mm) in diameter (Ref: § 5.7.4.1 (F), NFPA 58).**

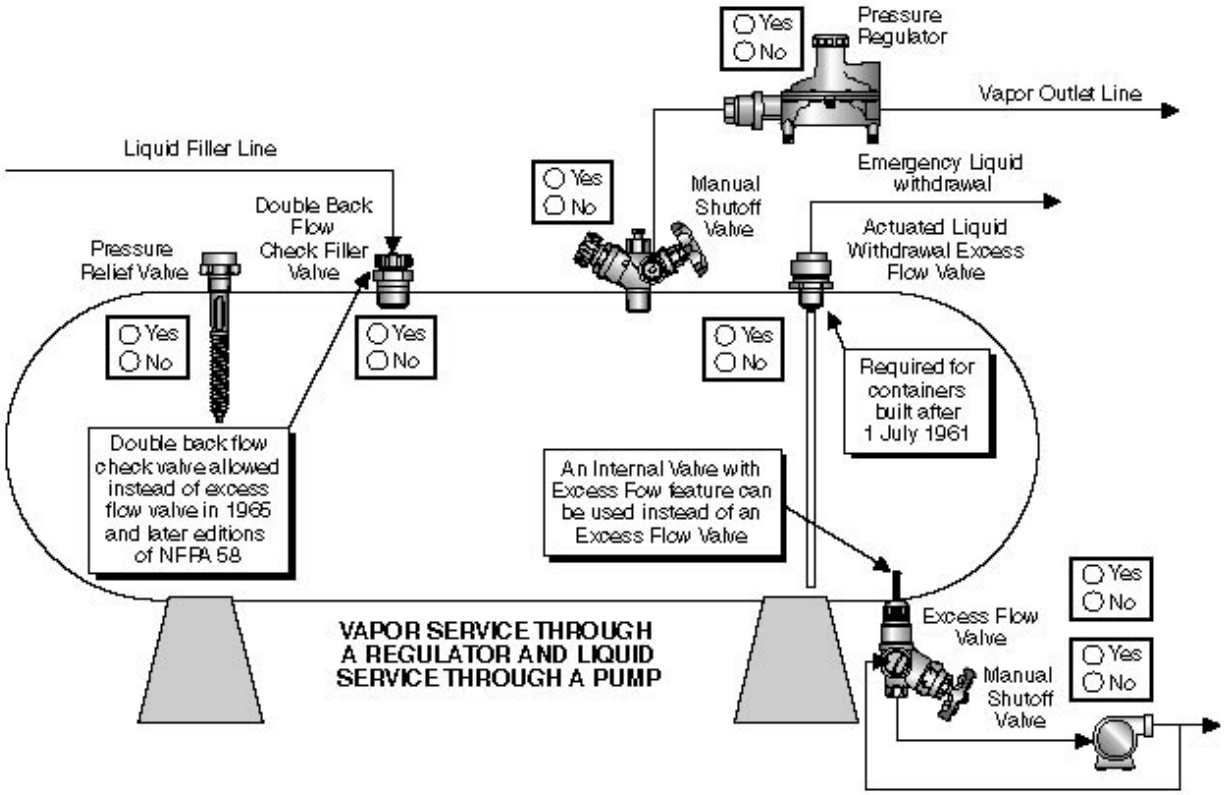

Figure 5-1C: Container with Both Liquid and Vapor Service, Regulator in the Vapor Service Line.

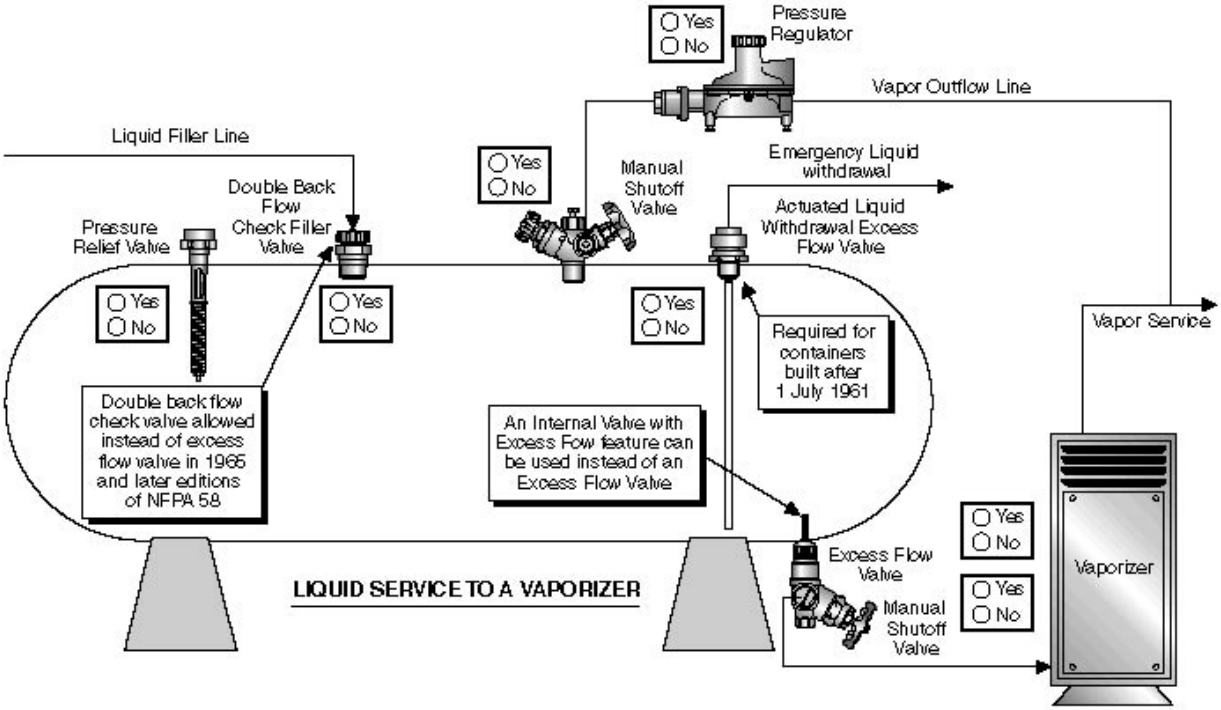

Figure 5-1D: Container Feeding Liquid to a Vaporizer.

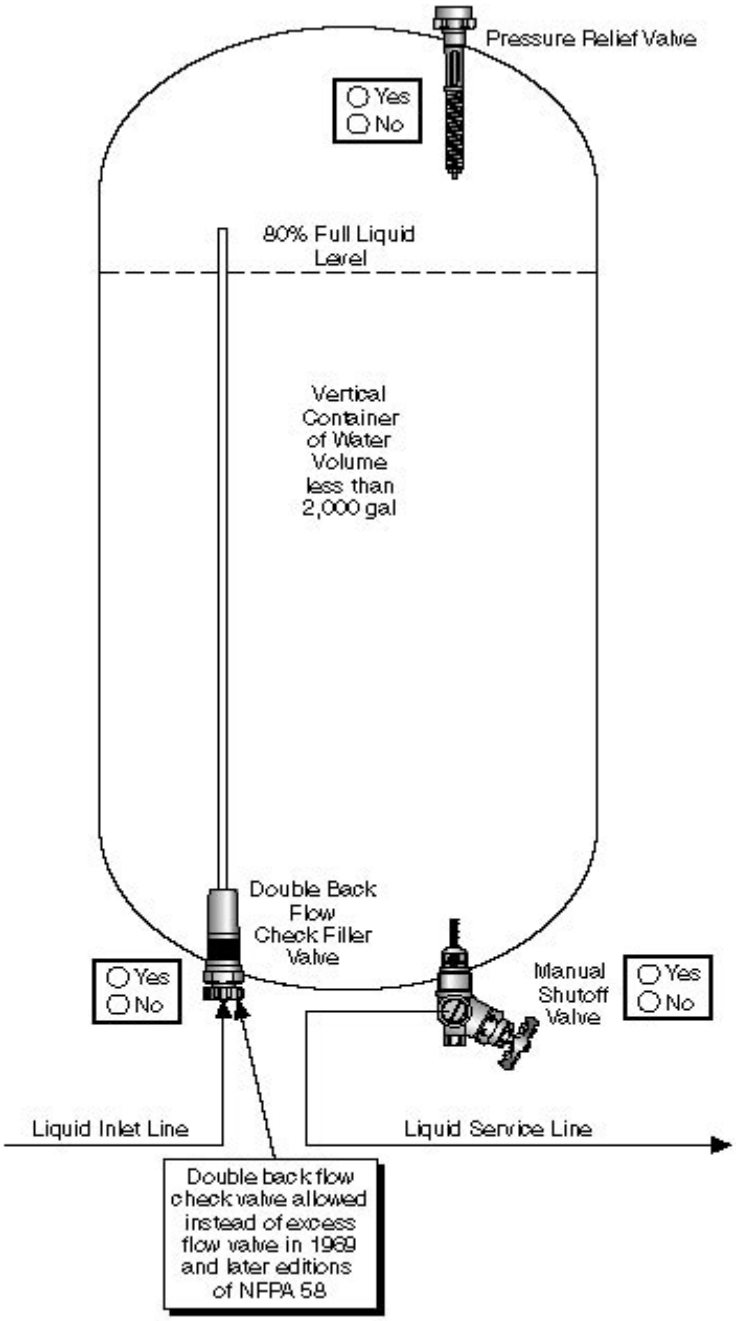

Figure 5-1E: Vertical Container for Liquid Service.

5.1.2 <u>Individual Containers greater than 2,000 gallons water capacity and less than or equal to 4,000 gallons water capacity</u>

A) <u>Containers used in Residential and Commercial Facilities</u>

Product control appurtenance requirements for containers greater than 2000 and less than or equal to 4000 gallons water capacity used in residential and commercial establishments are the same as those discussed earlier having water capacity of 2000 gallons or less. Hence, the same analysis as in the previous section 5.1.1 should be performed. These are indicated below. *Note: Container appurtenances shown are illustrative of product control equipment only. See NFPA 58 for all container appurtenances required. Illustrations are not intended to be used for system design purposes.*

Complete the following steps using the schematics in Figure 5-1A through Figure 5-1E:

1. Select the first container in the facility of 2001 through 4,000 gallons water capacity. Enter this as container number 1 in Column A of Form 5.2 below.
2. Review each of the service configurations given in Figure 5-1A through Figure 5-1E. Select the schematic that most closely represents the configuration in the facility for this container. Enter in column 2 the figure number of the configuration selected.
3. Count the total number of "Yes" shown in this configuration. This represents the number of required appurtenances for the specific configuration. Enter this number in column C of Form 5.2.
4. Check "Yes" under each appurtenance that is actually installed on your container. If the appurtenance is not provided, then check "No."
5. Count the number of boxes checked "Yes." Enter this number in Column D of Form 5.2.
6. Repeat the above steps 1 through 5 for each container of water capacity in the range of 2,001 through 4,000 gallons.

Form 5.2

Compliance with Code Requirements for Appurtenances on Containers Of water capacity 2001 gallons through 4,000 gallons Used in Residential and Commercial Facilities

A	B	C	D	E
Container #	**Service Configuration Sub Figure (in Figure 5-1)**	**Number of Product Control Appurtenances**		**NFPA 58 Section Reference (2008 edition)**
		Required by NFPA 58 (applicable edition)	**Installed on the Container**	
1				5.7.4.1 and Table 5.7.4.1
2				
3				
4				
5				
6				

If, in Form 5.2, any one of the numbers in column D is less than the number in Column C of the corresponding row, these items must be addressed and brought into compliance with the specific edition of NFPA 58 that the facility was constructed to.

B) Containers used in Bulk Plants and Industrial Plants

The Code requirements for product control appurtenances on containers used at industrial plants and bulk plants are more stringent than those used for residential and commercial service. Several different service configurations are acceptable. These are indicated in Form 5.3. *Note: Container appurtenances shown are illustrative of product control equipment only. See NFPA 58 for all container appurtenances required. Illustrations are not intended to be used for system design purposes.*

Enter the information in Form 5.3 by following the steps indicated below

1. Select the first container in the facility of 2,001 through 4,000 gallons water capacity. Enter this as container number 1 in Column A of Form 5.3 below.
2. Complete, for each container, the rows identified as vapor inlet, vapor outlet, liquid inlet and liquid outlet service.
3. Select the appurtenance configuration for vapor service corresponding to the design used in the facility. Figure 5-2 shows different vapor inlet configurations. Enter, in column E, the configuration number that corresponds to the design used in the facility.
4. Count all "Yes" in the schematic sketch corresponding to this configuration. This is the number of appurtenances required by NFPA 58. Enter this number in column F of the row corresponding to "Vapor Inlet."
5. Check "Yes" corresponding to each appurtenance that is installed on this container. If the appurtenance is not provided, then check "No" for that appurtenance. Count the total number of installed appurtenance boxes marked "Yes" in the facility. Record this number in column G of the same row.
6. Repeat steps 3, 4 and 5 for each vapor outlet configuration (using Figure 5-3), liquid inlet configuration using Figure 5-4, and liquid outlet configuration using Figure 5-5.
7. Repeat steps 1 through 6 for each container 2,001 through 4,000 gallons water capacity located in the facility.

Form 5.3

Compliance with Code Requirements for Appurtenances on Containers Having a Water Capacity of 2,001 through 4,000 Gallons Used in Bulk Plants and Industrial Plants

A	B	C	D	E	F	G
Container #	**LP-Gas inlet to and outlet from the container****		**Figure #**	**Total Number of Product Control Appurtenances**		**NFPA 58 Section Reference (2008 edition)**
				Required by NFPA 58 (applicable edition)	**Installed on the container**	
1	**Vapor**	Inlet	5-2			See §5.7.4.2 and Table 5.7.4.2
		Outlet	5-3			
	Liquid	Inlet	5-4			
		Outlet	5-5			
2	**Vapor**	Inlet	5-2			
		Outlet	5-3			
	Liquid	Inlet	5-4			
		Outlet	5-5			
3	**Vapor**	Inlet	5-2			
		Outlet	5-3			
	Liquid	Inlet	5-4			
		Outlet	5-5			
4	**Vapor**	Inlet	5-2			
		Outlet	5-3			
	Liquid	Inlet	5-4			
		Outlet	5-5			

****** If the container does not provide an opening for the specific function listed, enter 0 (zero) in columns E and F corresponding to that row.

If, in Form 5.3, any one of the numbers in column F is less than the number in Column E of the corresponding row, these items must be addressed and brought into compliance with the specific edition of NFPA 58 that the facility was constructed to.

Note: Container appurtenances shown are illustrative of product control equipment only. See NFPA 58 for all container appurtenances required. Illustrations are not intended to be used for system design purposes.

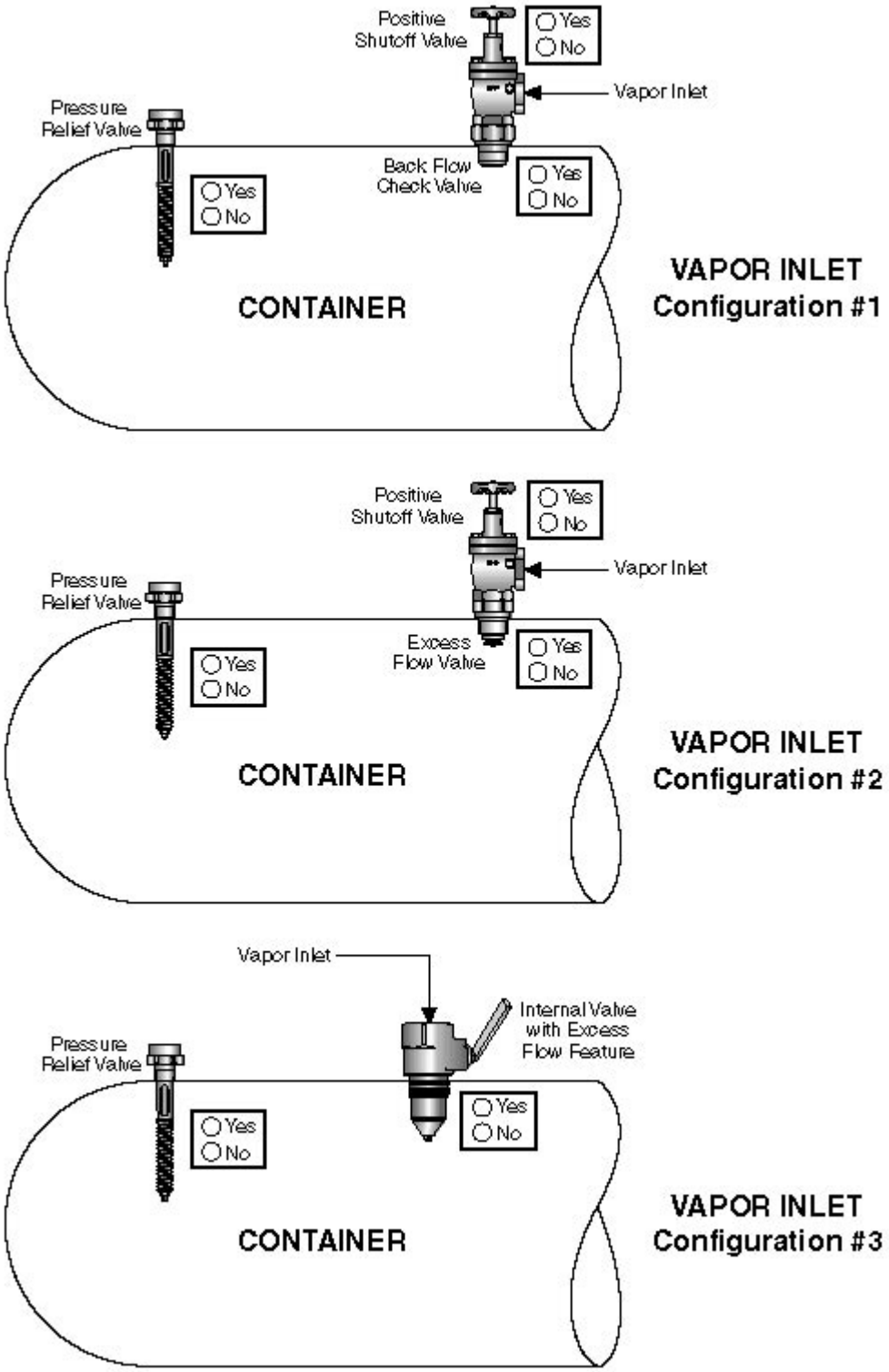

Figure 5-2: Vapor Inlet Appurtenances on Containers of Water Capacity Greater Than 2,000 Gallons

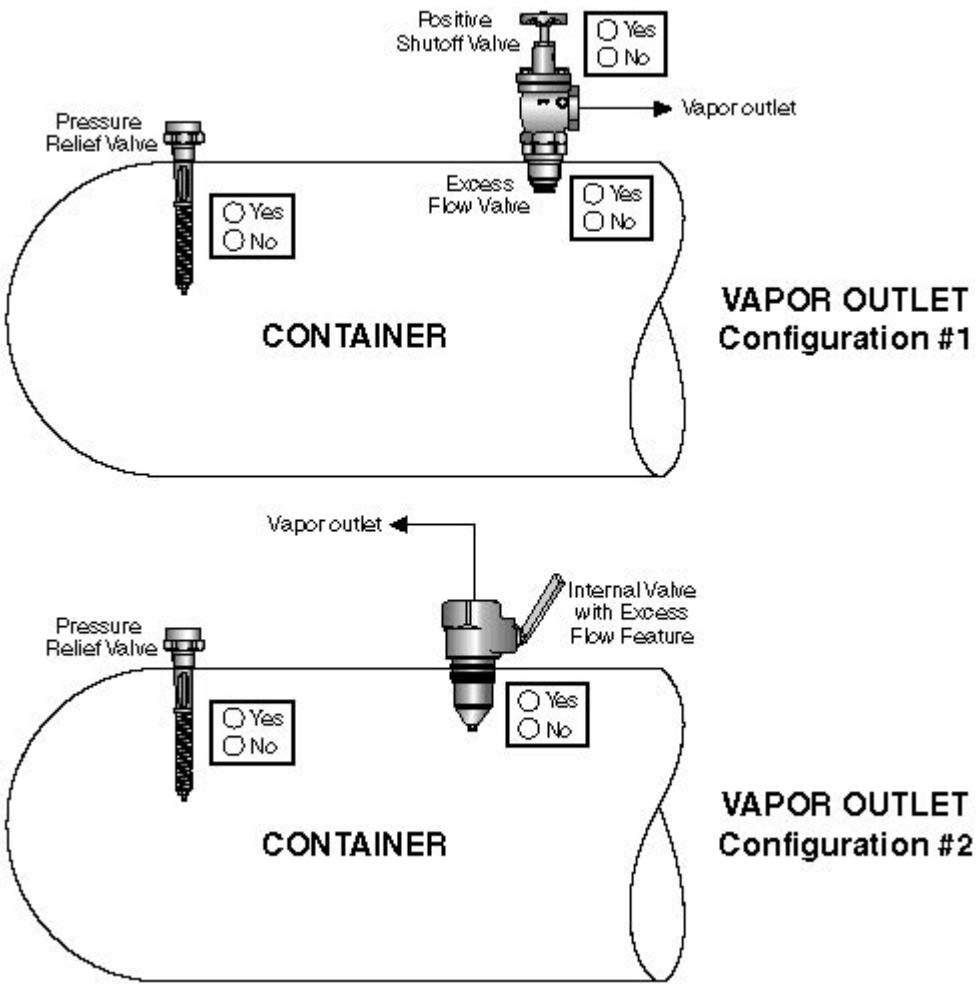

Figure 5-3: Vapor Outlet Appurtenances on Containers of Water Capacity Greater Than 2,000 Gallons

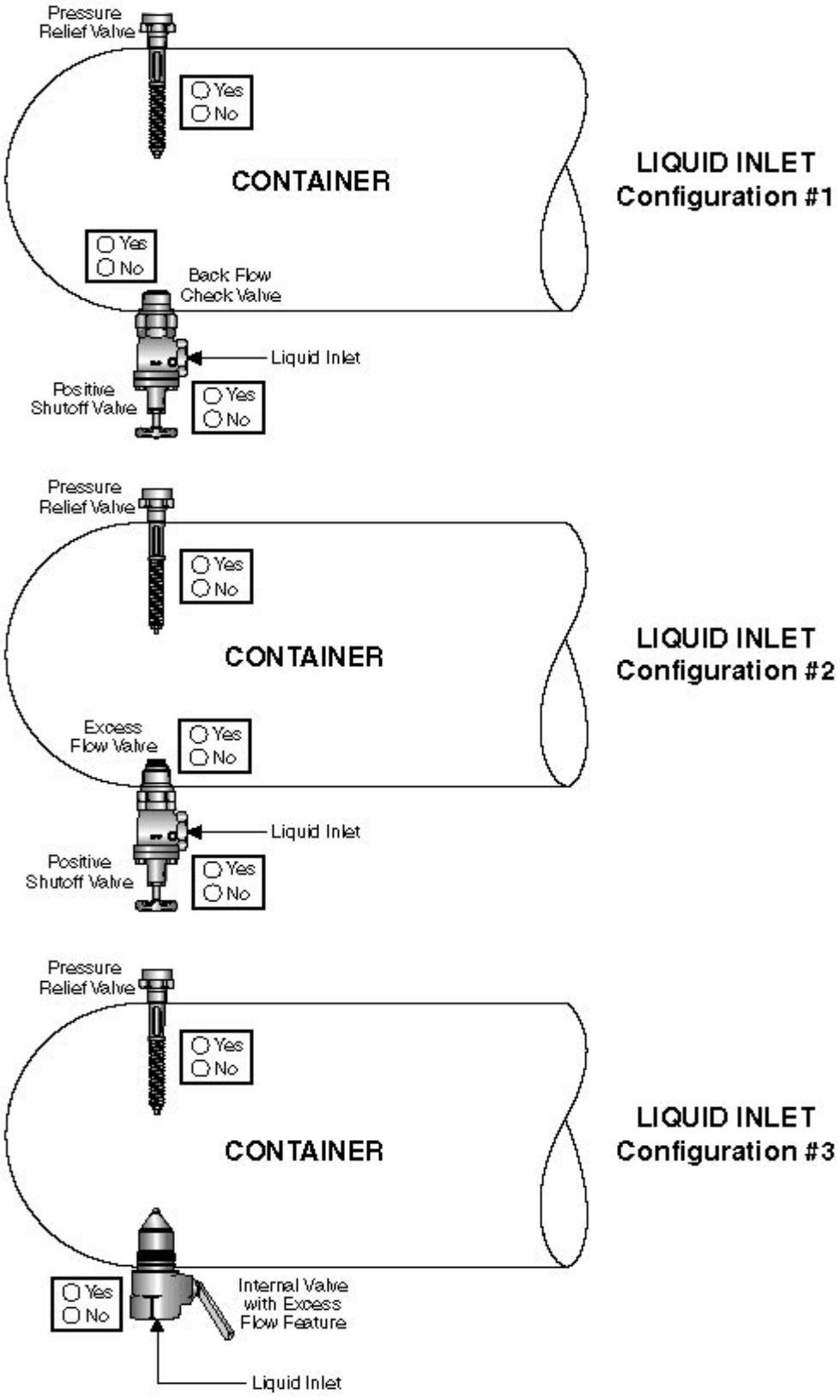

Figure 5-4: Liquid Inlet Valves on Containers 2,001 through 4,000 Gallons Water Capacity

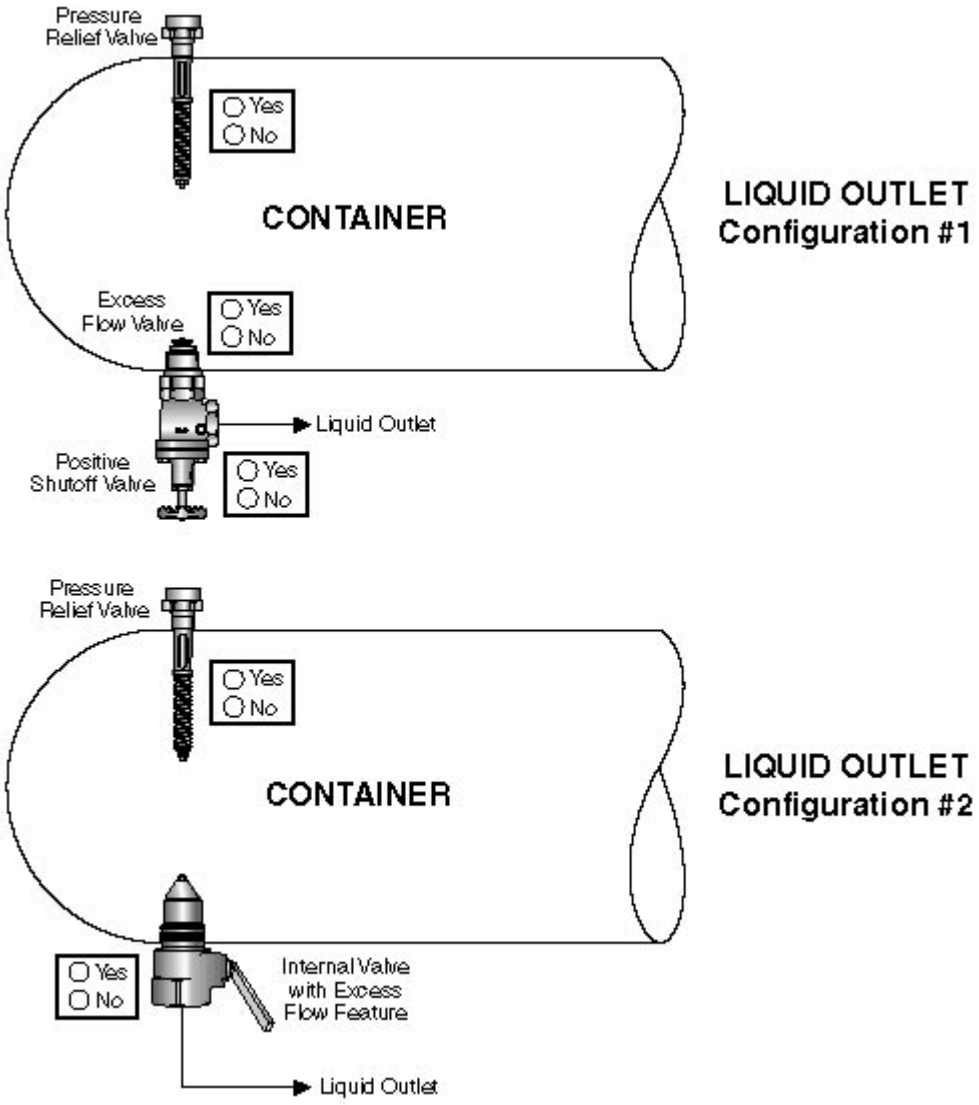

Figure 5-5: Liquid Outlet Valves on Containers 2,001 through 4,000 Gallons Water Capacity

5.1.3 Individual Containers Having a Water Capacity Greater than 4,000 Gallons used in Bulk Plants and Industrial Plants

The product control appurtenances for containers larger than 4,000 gallons water capacity are similar to those for the more than 2,000 through 4,000 gallon water capacity containers. However, there are retrofit requirements for existing containers without internal valves in liquid service that must be completed by July 1, 2011.

The compliance with the Code requirements for appurtenances in this container size range must be evaluated for LP-Gas flow both into the container (vapor and liquid) and out of the container (vapor and liquid). Several different appurtenance service configurations meet these requirements. These are indicated in Form 5.4. *Note: Container appurtenances shown are illustrative of product control equipment only. See NFPA 58 for all container appurtenances required. Illustrations are not intended to be used for system design purposes.*

Enter the information in Form 5.4 by following the steps indicated below

1. Select the first container in the facility having a water capacity greater than 4,000 gallons. Enter this as container number 1 in Column A of Form 5.4 below.
2. Complete each of the rows identified as the vapor inlet, vapor outlet, liquid inlet and liquid outlet service for this container.
3. Select the appurtenance configuration for vapor service which most closely corresponds to the design used in the facility. Figure 5-2 shows different vapor inlet configurations. Enter in column D the configuration number that corresponds to the design used in the facility.
4. Count all "Yes" in the schematic sketch corresponding to this configuration and which provide for vapor inlet into the container. This is the number of required appurtenances that should be provided according to the Code. Enter this number in column E of the row corresponding to "Vapor Inlet."
5. Check "Yes" corresponding to each appurtenance that is installed on this container. If the appurtenance is not provided, then check "No". Count the total number of boxes with installed appurtenance marked "Yes" in the facility. Record this number in column F of the same row.
6. Repeat steps 3, 4 and 5 for each vapor outlet configuration (using Figure 5-3), liquid inlet configuration (using Figure 5-6) and liquid outlet configuration (using Figure 5-7).
7. Repeat steps 1 through 6 for each container of water capacity greater than 4,000 gallons located at the facility.

Form 5.4

Compliance with Code Requirements for Appurtenances on Containers Having a Water Capacity Greater Than 4,000 Gallons Used in Bulk Plants and Industrial Plants

A	B	C	D		E	F	G
Container #	**LP-Gas inlet to and outlet from the container****		**Enter Configur-ation Number**		**Total Number of Product Control Appurtenances**		**NFPA 58 Section Reference (2008 edition)**
					Required by NFPA 58 (applicable edition)	**Installed on the container**	
1	**Vapor**	Inlet	5-2				See §5.7.4.2 and Table 5.7.4.2
		Outlet	5-3				
	Liquid	Inlet	5-6				
		Outlet	5-7				
2	**Vapor**	Inlet	5-2				
		Outlet	5-3				
	Liquid	Inlet	5-6				
		Outlet	5-7				
3	**Vapor**	Inlet	5-2				
		Outlet	5-3				
	Liquid	Inlet	5-6				
		Outlet	5-7				
4	**Vapor**	Inlet	5-2				
		Outlet	5-3				
	Liquid	Inlet	5-6				
		Outlet	5-7				

****** If the container does not provide an opening for the specific function listed, enter 0 (zero) in columns E and F corresponding to that row.

If in Form 5.4 any one of the numbers in column F is less than the number in Column E of the corresponding row, these items must be addressed and brought into compliance with the specific edition of NFPA 58 that the facility was constructed to.

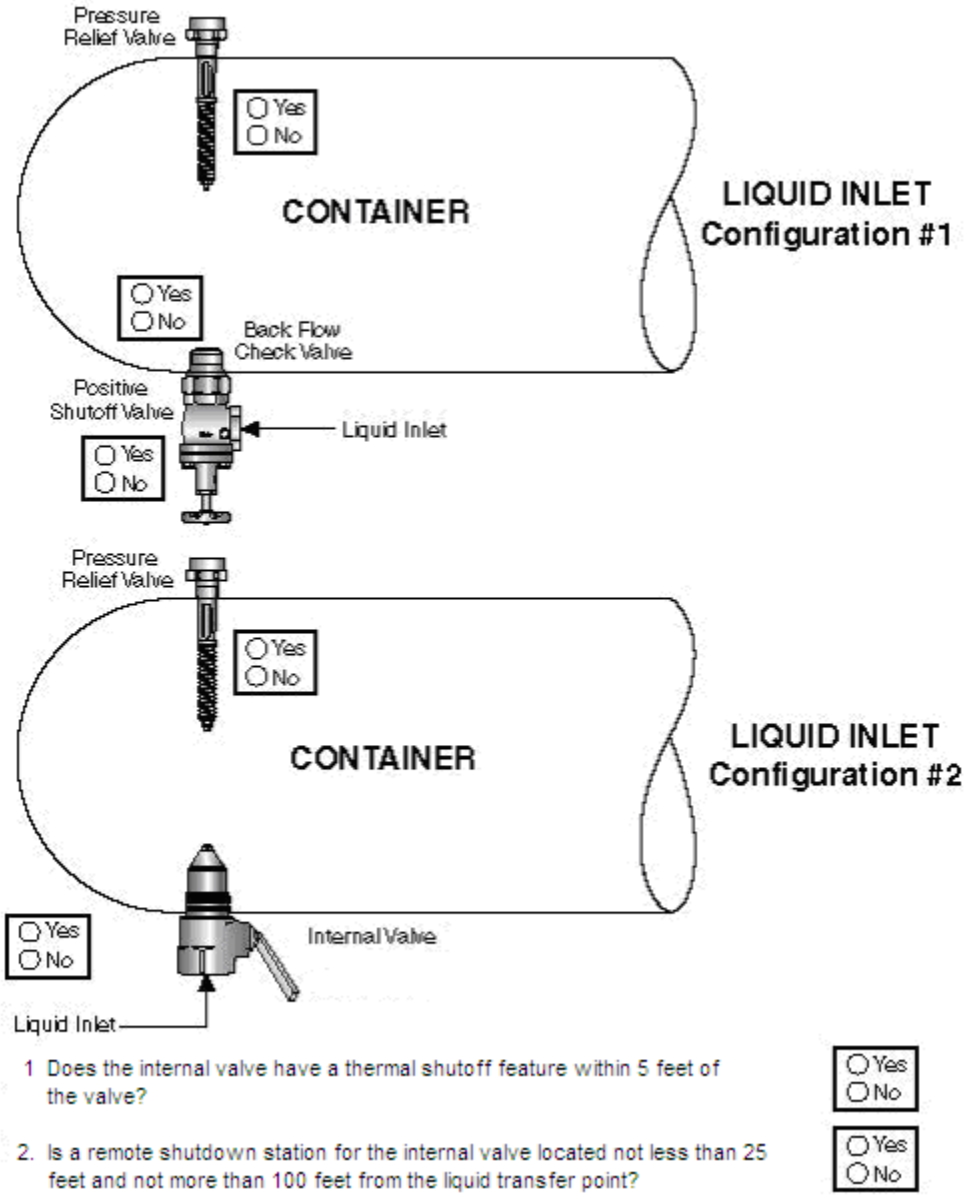

1 Does the internal valve have a thermal shutoff feature within 5 feet of the valve? Yes No

2. Is a remote shutdown station for the internal valve located not less than 25 feet and not more than 100 feet from the liquid transfer point? Yes No

Figure 5-6A Liquid Inlet Valves on Containers With Water Capacity Greater Than 4,000 Gallons in New Bulk Plants and Industrial Plants

(***NOTE: Prior to July 1, 2011 <u>existing</u> installations may utilize Configurations 3, 4 or 5 of Fig 5-6B, or either configuration in Figure 5-6A. After July 1, 2011, installations must comply with Configurations 4 or 5 below, or Configuration 1 or 2 in Figure 5-6A.)***

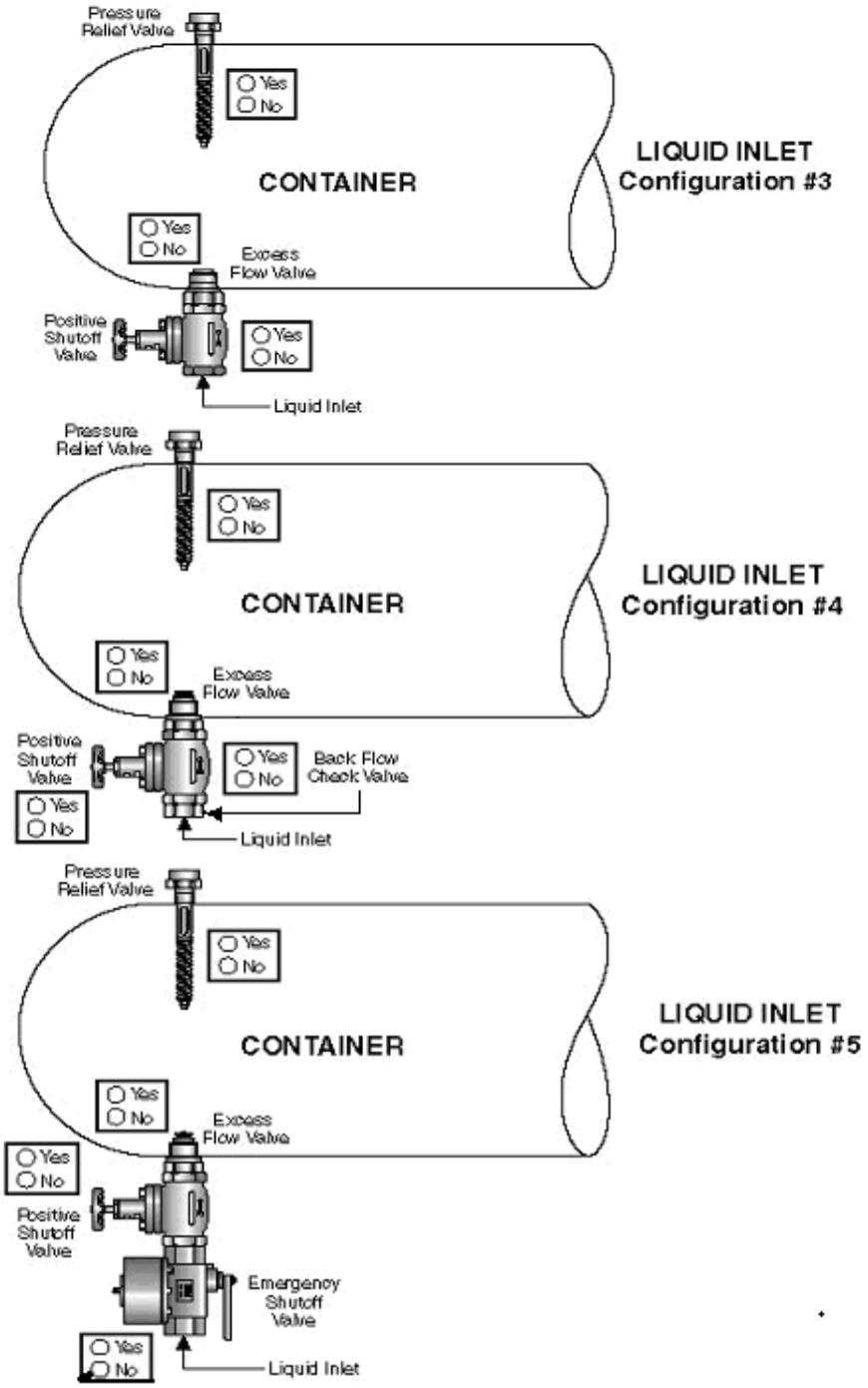

Note: *The emergency shut off valve in configuration #5 must be equipped for remote closure. This valve must be installed in the line upstream as close as practical to the positive shutoff valve/excess flow valve combination.*

Figure 5-6B: Liquid Inlet Valves on Containers With Water Capacity Greater Than 4,000 Gallons in Existing Bulk Plants and Industrial Plants

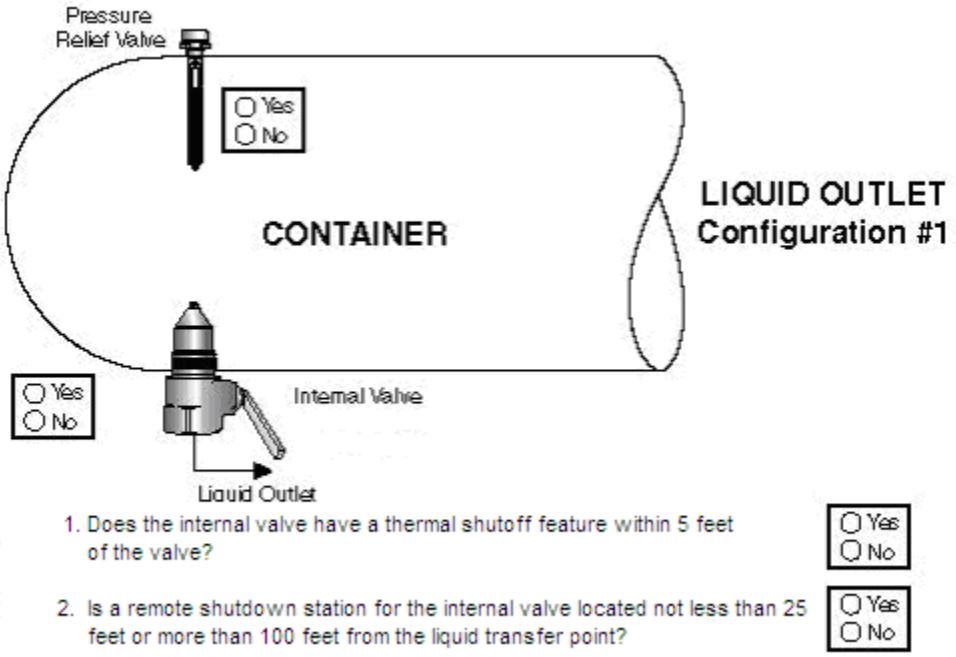

Figure 5-7A: Liquid Outlet Valves on Containers with Water Capacity Greater Than 4,000 Gallons in New Bulk Plants and Industrial Plants

(***NOTE:*** ***Prior to July 1, 2011, <u>existing</u> installations may utilize Configurations 2 or 3 of Fig 5-7B or Configuration 1 in Figure 5-7A. After July 1, 2011, installations must comply with Configuration 3 in Figure 5-7B or Configuration 1 in Fig. 5-7A*****).**

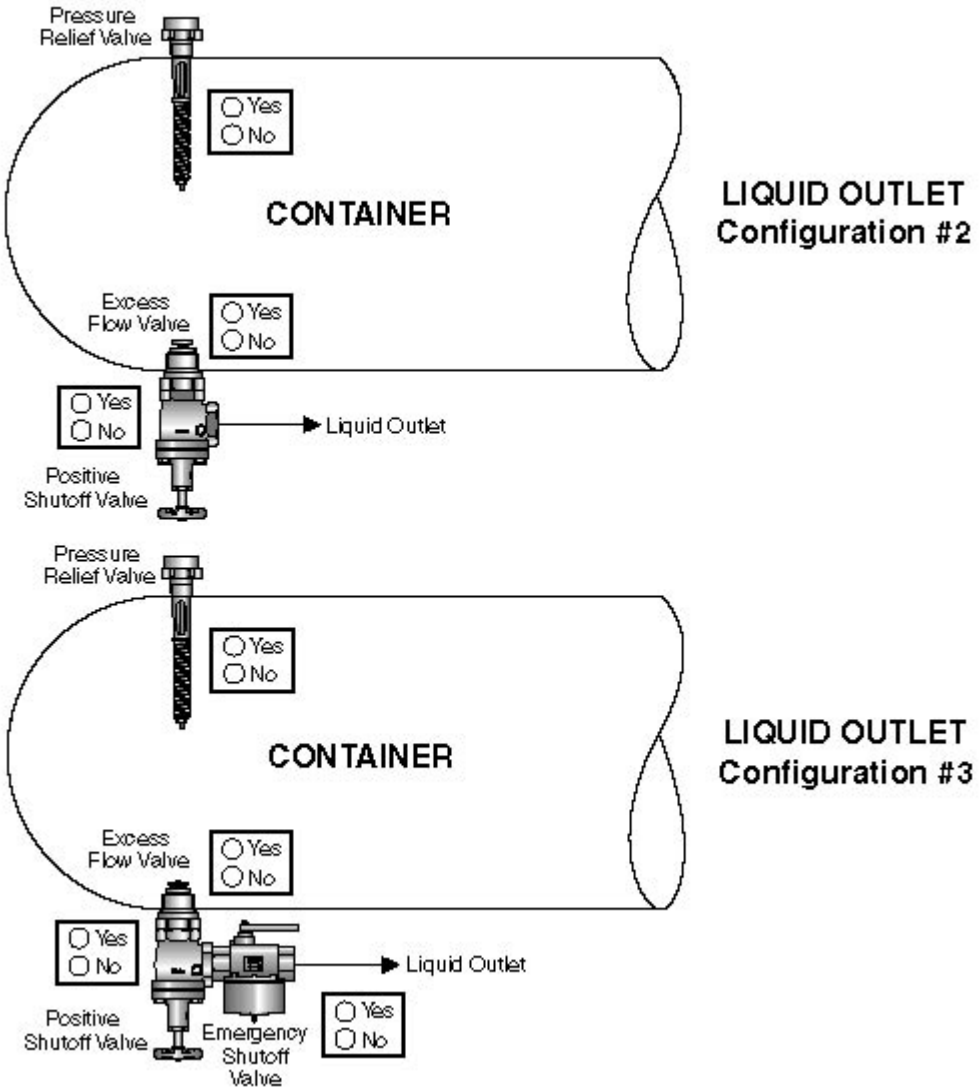

Note: *The emergency shut off valve in configuration # 3 must be equipped for remote closure. This valve must be installed in the line downstream, as close as practical to the positive shutoff valve/excess flow valve combination.*

Figure 5-7B: Liquid Outlet Valves on Containers with Water Capacity Greater Than 4,000 Gallons in Existing Bulk Plants and Industrial Plants

5.2 Product Control Measures in Transfer Piping

5.2.1 Manifolded and Remotely Filled Containers

The containers in some LP-Gas facilities, especially in bulk plants, may be remotely filled with an inlet manifold connected to one or more containers. The vapor withdrawal or liquid withdrawal from containers may also be through a common manifold. In such cases, there are several appurtenance requirements to control the potential release of product.

If the facility contains a liquid transfer line header (manifold) 1½-inch diameter or larger, and a pressure equalizing vapor line that is 1¼-inch diameter or larger, then continue with the analysis in this section by completing Form 5.5, Form 5.6 and Form 5.7. Otherwise, skip this section and go to section 5.3. *Note: Container appurtenances shown are illustrative of product control equipment only. See NFPA 58 for all container appurtenances required. Illustrations are not intended to be used for system design purposes.*

Form 5.5
Requirements for Transfer Lines of 1½-inch Diameter or Larger, Liquid-into-Containers

A	B	C	D	E	F
Item #	**Appurtenance (Either No. 1 or No. 2)****	**Appurtenance Provided with the Feature**	**Installed in the facility?**		**NFPA 58 Section Reference (2008 edition)**
			Yes	**No**	
1	Emergency Shutoff Valve (ESV) (Ref § 6.12)	Installed within 20 ft. of lineal pipe from the nearest end of the hose or swivel-type connections.			6.12.2
		Automatic shutoff through thermal (fire) actuation with melting point of thermal element < 250 ^{o}F			6.12.6
		Temperature sensitive element (fusible link) installed within 5 ft from the nearest end of the hose or swivel type piping connected to liquid transfer line.			6.12.6
		Manual shutoff feature provided at ESV installed location.			6.12.10 (1)
		Manual shutoff device provided at a remote location, not less than 25 ft., and not more than 100 ft. from the ESV.			6.12.10 (2)
		An ESV is installed on each leg of a multi leg piping each of which is connected to a hose or a swivel type connection on one side and to a header of size 1½ inch in diameter or larger on the other side.			6.12.5 6.18.2.6 (1)
		Breakaway protection is provided such that in any pull-away break will occur on the hose or swivel-type connection side while retaining intact the valves and piping on the plant side.			6.12.8

Form 5.5 (continued)

A	B	C	D	E	F
Item #	**Appurtenance**	**Appurtenance Provided with the Feature**	**Installed in the facility?**		**NFPA 58 Section Reference (2008 edition)**
			Yes	**No**	
2	Back flow Check Valve (BCK)**	Installed downstream of the hose or swivel-type connection			6.12.8
		BCK is designed for this specific application.			6.12.4
		A BCK is installed on each leg of a multi leg piping each of which is connected to a hose or a swivel type connection on one side and to a header of 1½ inch in diameter or larger on the other side.			6.12.5
		Breakaway protection is provided such that in any pull-away break will occur on the hose or swivel-type connection side while retaining intact the valves and piping on the plant side.			6.12.8

****** In lieu of an emergency shutoff valve, the backflow check valve (BCK) is only permitted when flow is only into the container and shall have a metal-to-metal seat or a primary resilient seat with metal backup, not hinged with a combustible material (6.12.3, 6.12.4).

Form 5.6
Requirements for Transfer Lines of 1½-inch Diameter or Larger, Liquid Withdrawal From Containers

A	B	C	D	E	F
Item #	**Appurtenance**	**Appurtenance Provided with the Feature**	**Installed in the facility?**		**NFPA 58 Section Reference (2008 Edition)**
			Yes	**No**	
1	Emergency Shutoff Valve (ESV) (Ref § 6.12.1)	Installed within 20 ft. of lineal pipe from the nearest end of the hose or swivel-type connections.			6.12.2
		Automatic shutoff through thermal (fire) actuation with melting point of thermal element < 250 ^{o}F.			6.12.6
		Temperature sensitive element installed within 5 ft from the nearest end of the hose or swivel type piping connected to liquid transfer line.			6.12.6
		Manual shutoff feature provided at ESV installed location.			6.12.10 (1)
		Manual shutoff device provided at a remote location, not less than 25 ft., and not more than 100 ft. from the ESV.			6.12.10 (2)
		An ESV is installed on each leg of a multi leg piping each of which is connected to a hose or a swivel type connection on one side and to a header of 1½ inch in diameter or larger on the other side.			6.12.5 6.18.2.6 (1)
		Breakaway protection is provided such that in any pull-away break will occur on the hose or swivel-type connection side while retaining intact the valves and piping on the plant side.			6.12.8
		Number of ESV's in liquid withdrawal service			

Note: If more than one ESV is installed in the facility, use one Form 5.6 for each ESV.

Form 5.7
Requirements for Vapor Transfer Lines 1¼-inch Diameter or Larger

A	B	C	D	E	F
Item #	**Appurtenance**	**Appurtenance Provided with the Feature**	**Installed in the facility?**		**NFPA 58 Section Reference (2008 edition)**
			Yes	**No**	
1	Emergency Shutoff Valve (ESV) (Ref § 6.12.1)	Installed within 20 ft. of lineal pipe from the nearest end of the hose or swivel-type connections.			6.12.2
		Automatic shutoff through thermal (fire) actuation with melting point of thermal element < 250 ^{o}F			6.12.6
		Temperature sensitive element installed within 5 ft from the nearest end of the hose or swivel type piping connected to liquid transfer line.			6.12.6
		Manual shutoff feature provided at ESV installed location.			6.12.10 (1)
		Manual shutoff device provided at a remote location, not less than 25 ft., and not more than 100 ft. from the ESV.			6.12.10 (2)
		An ESV is installed on each leg of a multi leg piping each of which is connected to a hose or a swivel type connection on one side and to a header of 1-1/4 inch in diameter or larger on the other side.			6.12.5 6.18.2.6 (1)
		Breakaway protection is provided such that in any pull-away break will occur on the hose or swivel-type connection side while retaining intact the valves and piping on the plant side.			6.12.8
2	Back flow Check Valve (BCK)**	Installed downstream of the hose or swivel-type connection			6.12.8
		BCK is designed for this specific application.			6.12.3 and 6.12.4
		A BCK is installed on each leg of a multi leg piping each of which is connected to a hose or a swivel type connection on one side and to a header of 1-1/4 inch in diameter or larger on the other side.			6.12.5
		Breakaway protection is provided such that in any pull-away break will occur on the hose or swivel-type connection side while retaining intact the valves and piping on the plant side.			6.12.8

****** In lieu of an emergency shutoff valve, the backflow check valve (BCK) is only permitted when flow is only into the container and it shall have a metal-to-metal seat or a primary resilient seat with metal backup, not hinged with a combustible material (6.12.3, 6.12.4).

If a checkmark is made in the "No" column of any one of Form 5.5, Form 5.6 or Form 5.7, then these items must be addressed and brought into compliance with the specific edition of NFPA 58 that the facility was constructed to.

If the LP-Gas facility is designed using ALTERNATE PROVISIONS for the installation of ASME CONTAINERS, then continue the analysis below. Otherwise skip section 5.3 and go to Chapter 6.

5.3 Alternate Provisions for the Installation of ASME Containers

Facilities may be provided with redundant fail-safe product control measures (section 5.3.1) and incorporate equipment designed for low emissions during transfer operations (section 5.3.2). These types of (redundant and fail-safe) product control measures and low emission transfer equipment provide additional safety and qualify the facility for the following benefits:

- Reduced separation distances from adjacent properties, and
- Mitigation of the need for special protection requirements.

Note that the reduced separation distance applies only to underground and mounded containers 2,001 through 30,000 gallons where all the requirements of NFPA 58 Section 6.26 (summarized in Forms 5.8 and 5.9) are complied with.

5.3.1 ASME Container Appurtenances and Redundant Fail-Safe Product Control Systems

If the facility incorporates redundant, fail-safe equipment, complete Form 5.8 below. The evaluation will indicate whether the design of the facility complies with the requirements for redundant and fail-safe product control systems. If redundant, fail-safe equipment are not provided, skip this section.

Form 5.8
Evaluation of Redundant Fail-Safe Design

A	B		C	D	E	F
Item #	**Description**		**Features**	**Installed in the facility?**		**NFPA 58 Section Reference (2008 edition)**
				Yes	**No**	
1	Container Sizes for which the appurtenances are provided		Appurtenances and Redundant Fail-Safe equipment are provided for each container of water capacity 2,001 gal. through 30,000 gal.			6.26.3 and 6.26.4
2	Liquid or Vapor withdrawal (1-1/4 in. or larger)		Internal Valve with integral excess flow valve or excess flow protection			6.26.3.1
			Positive Shutoff Valve installed as close as practical to the Internal Valve			6.26.3.4
3	Liquid or Vapor Inlet		Internal Valve with integral excess flow valve or excess flow protection or Back Flow Check valve			6.26.3.5
			Positive Shutoff Valve installed as close as possible to the Internal Valve or the back flow check valve			6.26.3.5
4	Railcar Transfer	Flow Into or Out of Railroad tank car	Approved emergency shutoff valves installed in the transfer hose or the swivel-type piping at the tank car end			6.18.2.6 (1) and 6.26.4.1

		Flow Only into railroad tank car	Approved emergency shutoff valve or backflow check valve installed in the transfer hose or the swivel-type piping at the tank car end			6.18.2.6 (2) and 6.26.4.1
5	Cargo Tank Transfer		Protection provided in accordance with 6.26.4.1			6.26.4.1
6	Automatic closure of all primary valves (IV & ESV) in an Emergency		Actuated by Fire Detection			6.26.4.2
			Actuated by a hose pull-away due to vehicle motion			6.26.4.2
7	Manually operated remote shutdown of IV and ESV		Remote shutdown station within 15 ft of the point of transfer?			6.26.4.3 (A)
			Another remote shutdown station between 25 ft and 100 ft of the transfer point?			6.26.4.3 (B)
			Shutdown stations will shut down electrical power supply, if any, to the transfer equipment and primary valves?			6.26.4.3
			Signs complying with the requirements of 6.24.4.3 (C) provided?			6.26.4.3 (C)

Note: If the facility does not have a rail terminal, write the word NA in both the "Yes" column and the "No" column in item 4 of this Form in the railroad tank car row. Similar option is also available if there is no cargo tank vehicle transfer station.

If the LP-Gas facility is provided with LOW EMISSION TRANSFER EQUIPMENT, then continue the analysis below. Otherwise skip section 5.3.2 and go to Chapter 6.

5.3.2 Low Emission Transfer Equipment

If the facility is designed with low emission transfer hoses and associated equipment, complete Form 5.9 below. Compliance with Section 6.26.5 of NFPA 58 results in a 50% reduction in the separation distances between transfer points described in Table 6.5.3 and Section 6.24.4.3. If the facility does not have low emission transfer equipment engineered into the facility design, skip this section.

Form 5.9
Evaluation of Low Emission Transfer Equipment

A	B	C		D	E	F
Item #	Description	Features		Installed in the facility?		NFPA 58 Section Reference (2008 Edition)
				Yes	No	
1	Transfer into Cylinders or ASME Containers on Vehicles	Delivery Nozzle and Filler Valve- Max. Liquid Release after transfer of 4 cc.	Fixed Maximum Liquid Level Gage not used during transfer operations			6.26.5.1 (B)
2	Transfer into Stationary ASME Containers. Delivery valve and nozzle combination	During product transfer or post transfer uncoupling of the hose, liquid product volume released to the atmosphere	does not exceed 4 cc (0.24 in^3) from a hose of nominal size 1 in or smaller			6.26.5.1 (A)
			does not exceed 15 cc (0.91 in^3) from a hose of nominal size larger than 1 in.			6.26.5.2 (B)
3	Transfer into Stationary ASME Containers Maximum filling limit	Do containers of less than 2,001 gal (w.c.) have an overfilling prevention device or another approved device?				6.26.5.2 (F)
		Do containers of greater than 2,000 gal (w.c.) have a float gage or other non-venting device?				6.26.5.2 (E)
4	Transfer into Stationary ASME Containers Fixed Maximum Liquid Level gage	Not used during routine transfer operations but used to calibrate other non-venting liquid level gages in the container				6.26.5.2 (C,D)

Note: 1) If the facility does not have a particular feature described in the table, write "NA" in both the "Yes" and "No" columns corresponding its row in item 2.

If separation distance reductions are intended, checkmarks made in the "No" column of either Form 5.8 or Form 5.9 must be addressed and brought into compliance with the specific edition of NFPA 58 that the facility was constructed to.

CHAPTER 6

Analysis of Local Conditions of Hazard

6.1 Physical Protection Measures

Protection should be provided for LP-gas facilities, systems and appurtenances against the risk of tampering and from the accidental collision of vehicles with containers and/or transfer lines. Requirements to prevent such tampering or accidents are specified in the Code. Compliance requirements for the facility are indicated in Form 6.1. Complete all forms in this chapter. (**NOTE:** See NFPA 58 for complete requirements.)

Form 6.1
Evaluation of Physical Protection and Other Measures

A	B	C	D	E	F
#	Item	Features	Installed in the facility?		NFPA 58 Section Reference (2008 Edition)
			Yes	No	
1	Lighting‡	Provide lighting for nighttime operations to illuminate storage containers, container being loaded, control valves, and other equipment			6.18.5
2	Vehicle impact protection	Protection against vehicular (traffic) impacts on containers, transfer piping and other appurtenances is designed and provided commensurate with the size of vehicles and type of traffic in the facility. (Example protection systems include but not limited to (1) Guard rails, (2) Steel bollards or crash posts, (3) Raised sidewalks.			6.9.3.10 and 6.19.3.2
3	Protection against corrosion	Provide protection against corrosion where piping is in contact with supports or corrosion causing substances.			6.9.3.11
Complete only 4A or 4B					
4A	Perimeter Fence	Is an industrial type or chain link fence of at least 6 ft high or equivalent protection provided to enclose (all around) container appurtenances, pumping equipment, loading and unloading and container filling facilities?			6.18.4.2
		Are at least two means of emergency accesses (gates) from the enclosure provided? **NOTE: Write "N.A." (not applicable) if** (i) The area enclosed is less than 100 ft^2, or (ii) The point of transfer is within 3 ft of the gate, or containers are not filled within the enclosure			6.18.4.2 (A)
		Is a clearance of at least 3 feet all around to allow emergency access to the required means of egress been provided?			6.18.4.2 (B)
	Guard Service	If a guard service is provided, does this service cover the LP-Gas plant and are the guard personnel provided with appropriate LP-Gas related training, per section 4.4 of NFPA 58?			6.18.4.3
4B	Lock-in-Place devices	Are Lock-in-Place devices provided to prevent unauthorized use or operation of any container appurtenance, system valves, or equipment in lieu of the fence requirements above?			6.18.4.2 (C)

Note: Fill only items 1, 2, 3, and 4A or 4B. Indicate with "NA" when not filling the "Yes" or "No" column.
‡ Indicate with "NA" if the facility is not operated at night.

6.2 Ignition Sources and Control

The potential for the ignition of LP-Gas vapors released in a facility is reduced by eliminating as many ignition sources as possible, designing electrical equipment to reduce or eliminate sparking and ensuring that during transfer operations known ignition sources are turned off. The ignition source control involves both passive methods as well active methods. Form 6.2 is used to evaluate whether your facility satisfies the code requirements for ignition source control. (**NOTE:** See NFPA 58 for complete requirements.)

Form 6.2
Assessment of Sources of Ignition and Adjacent Combustible Materials

A	B	C	D	E
#	Sources of Ignition and Requirements Pertaining to Adjacent Combustible Materials	Is the Facility compliant?		NFPA 58 Section Reference (2008 Edition)
		Yes	No	
1	Are combustible materials, weeds and tall grass not closer than 10 ft. from each container?			6.4.5.2
2	Is a distance at least 20 ft. provided between containers and tanks containing flammable liquids with flash point less than 200 ^{o}F (ex., gasoline, diesel)?			6.4.5.5
3	Are electrical equipment and wiring installed per Code requirements?			6.22.2
4	Is open flame equipment located and used according to Code?			6.22.3.1
5	Are ignition control procedures and requirements during liquid transfer operations complied with.?			7.2.3.2
6	Is an approved, portable, dry chemical fire extinguisher of minimum capacity 18 Lbs. and having a B:C rating provided in the facility?			6.25.4.2
7	Is an approved, portable, dry chemical fire extinguisher of minimum capacity 18 Lbs. and having a B:C rating provided on each truck or trailer used to transport portable containers?			9.4.7
8	Is the prohibition on smoking within the facility premises strictly enforced?			7.2.3.2 (B) & 9.4.10

Note: Insert "NA" in both "Yes" and "No" columns of any items that are not applicable.

6.3 Separation Distances

6.3.1 Separation Distances between Container and Important Buildings, Other Properties and Transfer Points

The separation distance provisions in NFPA 58 are minimum requirements and are intended to buy time in an emergency and to implement appropriate response. The requirements are dependent upon the size of the container. Complete the appropriate section of Form 6.3. (**NOTE:** See NFPA 58 for complete requirements.)

Form 6.3

Separation Distances from Containers to Buildings, Property Lines that can be Built upon, Inter-container Distances, and Aboveground Flammable or Combustible Storage Tanks

A	B	C	D	E	F	G
#	**Container Size Range in gal (W.C.)**	**Separation between a property line, important building or other property and the nearest container which is**	**Minimum Distance (ft)**	**Is the Facility compliant?**		**NFPA 58 Section Reference (2008 Edition)**
				Yes	**No**	
1	501 through 2,000	Above Ground	25			6.3.1 and Table 6.3.1
		Underground or Mounded	10			
		Between containers	3			
2	2,001 through 30,000	Above Ground	50			
		Underground or Mounded	50			
		Between containers	5			
3	30,001 through 70,000	Above Ground	75			
		Underground or Mounded	50			
		Between containers	¼ sum of diameters of adjacent containers			
4	70,001 through 90,000	Above Ground	100			
		Underground or Mounded	50			
		Between containers	¼ sum of diameters of adjacent containers			
5	All sizes greater than 125 gal	Separation distance between a LP-Gas container and an above ground storage tank containing flammable or combustible liquids of flash points below 200 ^{o}F.	20			6.4.5.4 and 6.4.5.5

Note: If any of the container sizes indicated in the above form are not present in the facility, enter "NA" in both Yes and No columns.

If the LP-Gas plant is provided with every one of the redundant and fail-safe product control-design equipment indicated in Form 5.8, then the minimum distance in column D of Form 6.3 can be reduced to 10 feet for underground and mounded containers of water capacity 2,001 gal to 30,000 gal.

6.3.2 Separation Distances between Transfer Points and other Exposures

If the liquid transfer point is not on the container but is at a remote location complete Form 6.4. **Do not complete Form 6.4 when the filling is through a container valve**.
(**NOTE:** See NFPA 58 for complete requirements.)

Form 6.4
Separation Distances between Points of Transfer and other Exposures

A	B		C	D	E	F	G
#	Type of Exposure within or outside the facility boundary		Check if exposure is present	Minimum Distance (ft)	Is the Facility compliant?		NFPA 58 Section Reference (2008 Edition)
					Yes	No	
1	Buildings, mobile homes, recreational vehicles, and modular homes with fire-resistive walls			10			Section 6.5.3 Table 6.5.3
2	Buildings with other than fire resistive walls			25			
3	Building wall openings or pits at or below the level of the point of transfer			25			
4	Line of adjoining property that can be built upon			25			
5	Outdoor places of public assembly, including school yards, athletic fields, and playgrounds			50			
6	Public ways, including public streets, highways, thoroughfares, and sidewalks	From points of transfer in LP-Gas dispensing stations and at vehicle fuel dispensers.		10			
		From other points of transfer		25			
7	Driveways			5			
8	Mainline railroad track centerlines			25			
9	Containers other than those being filled			10			
10	Flammable and Class II combustible liquid dispensers and aboveground and underground containers			20			
11	Flammable and Class II combustible liquid dispensers and the fill connections of LPG containers			10			
12	LP-Gas dispensing device located close to a Class I liquid dispensing device.			10			6.24.4.3

NOTE: Place a checkmark in column C against an exposure that is present in or around the facility. Fill columns E or F for only those rows for which there is a checkmark in column C.

If the facility contains low emission transfer equipment (i.e, all equipment identified in Form 5.9 are installed and are in working order), then the minimum separation distances in column D of Form 6.4 can be reduced to one half of the indicated values.

If the containers in the LP-Gas facility are provided with SPECIAL PROTECTION MEASURES, then continue the analysis below. Otherwise skip Forms 6.5 and 6.6 and go to Section 6.5. Also see Chapter 9.

6.4 Special Protection

In the event that a proposed installation is adjacent to a property containing an extremely high combustible fuel loading and the location of the storage containers is such that exposure of the containers to a fire on the adjacent property would severely impact the integrity of the containers, special protection methods may be utilized to reduce the exposure hazard to the containers. Installed special protection systems must comply with section 6.25.5 of NFPA 58, which addresses both passive and active protection systems.

- Passive approaches include insulating the outside of the containers, mounding above grade or burying the container.
- Active special protection includes fixed water spray systems or placement of monitor nozzles at strategic locations with respect to the containers to be protected.

Complete form 6.5 to determine compliance of the installation with the Code. Similarly, Form 6.6 indicates the requirements for active protection. This Form also should be completed as part of the fire safety analysis process.
(**NOTE:**. See NFPA 58 for complete requirements.)

Form 6.5
Special Protection Measures –Passive Systems

A	B	C	D		E
#	Special Protection Option	Question	Is the Facility compliant?		NFPA 58 Section Reference (2008 Edition)
			Yes	No	
1	Container Insulation	Insulation provided on each of the containers?			6.25.5.1
		Insulation material complies with the requirements of section 6.25.5.1of NFPA 58?			6.25.5.1 and 6.25.5.2
2	Mounding of containers	Each container in the facility is mounded?			6.25.5.3
		Mounding complies with each requirement under section 6.6.6.3 of NFPA 58.			6.25.5.3
3	Burying of containers	Each container in the facility is buried?			6.25.5.4
		Buried containers comply with each requirement under section 6.6.6.1 of NFPA 58.			6.6.6.1 & 6.25.5.4

Form 6.6
Special Protection Measures –Active Systems

#	Special Protection Option	Question	Is the Facility compliant?		NFPA 58 Section Reference (2008 Edition)
			Yes	No	
1	Water spray systems	Are fixed water spray systems, complying with NFPA 15[1] requirements, used for each container in the facility?			6.25.6.1
		Do fire responsive devices actuate water spray system automatically?			6.25.6.2
		Can the water spray systems be actuated manually also?			6.25.6.2
2	Monitor nozzle systems	Are the monitor nozzles located and arranged so that the water stream can wet the surfaces of all containers exposed to a fire?			6.25.6.3
		Can the water stream from a monitor nozzle reach and wet the entire surface of, at least, one half of a length from one end of each of the containers it is designed to protect?			6.25.6.3
		Do fixed monitor nozzles comply with NFPA 15[1] requirements?			6.25.6.1
		Do fire responsive devices actuate the monitor nozzles?			6.25.6.2
		Can the monitor nozzles can be actuated manually also?			6.23.6.2

1. Refer to Chapter 8 for a discussion on NFPA 15 *Standard for Water Spray Fixed Systems for Fire Protection*

6.5 Vehicular Protection

In the event that an installation is located where an immediate threat due to vehicular traffic is present, a barrier or other suitable protection may be necessary.

Form 6.7
Protection Against Vehicular Impact

#	System Protected	Is physical protection provided?		Type of physical protection installed
		Yes	No	
1	Storage containers			
2	Transfer stations			
3	Entryway into plant			

CHAPTER 7

Exposure To and From Other Properties, Population Density

7.1 Exposure to Off-Site Properties and Persons From In-Plant Propane Releases

Types of Propane Fires: A propane release inside the LP-Gas facility may affect adjacent properties and off-site populations if the release is of a sufficiently large size. An immediately ignited release will result in a local fire. Depending upon the characteristics of the release and ignition two types of local fires can occur, namely, a pool fire on any liquid pool of propane on the ground or a burning rising fireball.

If the released propane is not immediately ignited, then a dispersing cloud (or plume) of vapor will form. The cloud or plume will move in the direction of the wind. Because of the mixing of air with the dispersing propane, propane concentration decreases continuously both with downwind distance as well as in the crosswind direction. This cloud or plume can be ignited at any distance downwind by an ignition source when the concentration at the point of ignition is within the Lower Flammability Limit (LFL) to Upper Flammability Limit (UFL) range. For propane the range of flammable concentrations in air is between 2.15% and 9.6% by volume.

Ignition of a dispersing vapor cloud or plume may result in a flashback type of vapor fire. In extremely rare cases, and only when the physical conditions are conducive, with partial or full confinement of the propane-air mixture of proper concentration and its ignition, a vapor explosion can occur, resulting in a blast wave. If the dispersing cloud is not ignited it poses no hazard to the surrounding area.

Propane vapor at ambient pressure and temperature is heavier than air. Hence, any vapor released will tend to flow towards and accumulate in low-lying areas adjacent to the release location. If a building or other semi-confined area exists adjacent to the release location wherein the vapor can accumulate in the lower parts of the building, a potential explosion hazard will result.

Hazardous Effects of a Fire: The effect of a propane fire on an off-site property will depend on the type and material of construction of the structure and its distance from the fire and fire size. Similarly, the number of off-site persons adversely impacted by a fire inside a LP-Gas facility will also depend on, (in addition to the characteristics of the fire and the distance between the fire and the population) the type of population, the timeliness of notification, the effectiveness of the evacuation planning and implementation, etc.

Release Cases: In this manual, a number of mathematical models were developed for credible accident scenarios, to describe the effects of the release of propane inside LP-Gas facilities and its subsequent behavior. These models were used to calculate potential hazard areas for each scenario of release. Each potential release discussed has very low probability of occurrence. However, because of the flammability of propane, such releases may pose hazards. The hazard distance (to a

property outside the facility boundary or to off-site persons) from a propane release within the facility will depend on the size and duration of release, and the type of fire that occurs.

The calculated distance to which a hazard extends under each scenario of release and for each hazard behavior is indicated in Table 7.1.

To assess the hazards posed to offsite population from in-plant releases of propane it is necessary to:

1. Note the type of occupancies surrounding the facility, and
2. Describe in detail the characteristics and density of the population surrounding the facility.

To evaluate the impact on the surrounding population from an in-plant propane release, complete Form 7.2 using the results indicated in Table 7.1.

Table 7.1
Distances to Various Types of Propane Hazards Under Different Release Models**

Model #	Details of the Propane Release Model Releases from or due to		Vapor Dispersion Distance to LFL (ft)	Explosion Hazard Distance (ft)	Fire Ball Radiation Distance (ft)
1A	Bobtail hose failure. Release of the entire inventory in the hose, quickly.	1” ID x 150 ft hose length	250	110	50
1B		1” ID x 120 ft hose length	230	103	45
1C		1” ID x 75 ft hose length	190	90	40
2a	Release of the inventory in a transfer piping 1" x 30 ft + @ 20 gpm for 10 min., due to failed excess flow valve.		135	120	25
2b	Release of the inventory in a transfer piping 2" x 30 ft + @80 gpm for 10 mins.		230	252	48
2c	Release of the inventory in a transfer piping 2” x 80 ft. @ 70 gpm for 10 mins.		328	235	74
2d	Release of the inventory in a transfer piping 2.5" x 30 ft @80 gpm for 10 mins.		269	252	59
2e	Release of the inventory in a transfer piping 3" x 30 ft + @100 gpm for 10 mins.		312	287	69
2f	Release of the inventory in a transfer piping 3" x 18 ft + @100 gpm for 10 mins.		256	284	55
3	Release from the container pressure relief valve		No ignitable vapor concentration at ground level		
4	Release from a 1” ID x 150 ft transfer piping to a vaporizer and reduced flow from a partially open excess flow valve @ 20 gpm for 10 min.		250	120	50
5	Leak from a corrosion hole in a transfer pipe at a back pressure of 130 psig (corresponding to 80 ^{o}F) for 60 min. Hole size is ¼” ID.		110	120	5
6	Release of the entire inventory in a 2” ID x 20 ft., transfer hose.		195	90	40

6a	Release of the entire inventory in a 2.5 inch dia. transfer hose x 16 ft. length	215	98	45
6b	Release of the entire inventory in a 3-inch dia. transfer hose x 12 ft. length	230	100	46
7	Transport hose blow down: Hose size 2" ID, 20 ft length release for 3min., from a Transport after the tank is filled.	25	30	<5
7a	Transport hose blow down: Hose size 2.5" ID, 16 ft length release for 3min., from a Transport after the tank is filled.	25	29	<5
7b	Transport hose blow down: Hose size 3" ID, 16 ft length release for 3min., from a Transport after the tank is filled.	31	36	<5

** Results from models described in Appendix B. The results are rounded to the nearest 5 feet.

Form 7.1
Types of Occupancies(1) Near or Surrounding the LP-Gas Facility

Type of Occupancies	Model # from Table 7.1	Hazard Distance(2) (feet)	Is Occupancy located within the hazard distance from the Facility?	
			Yes	No
Assembly Occupancies (Places of worship, Libraries, Theaters and Auditoriums, Food or Drink Bars, Sports Stadiums, Amusement Parks, Transportation Centers, etc. with 50 or more people).				
Institutional Occupancies (Elderly Persons Home or Nursing Home, Hospitals, Alcohol & Drug Rehabilitation Centers, Prisons)				
Educational Occupancies (Elementary Schools, Day Care facilities, etc).				

NOTES: (1) Different types of occupancies are defined in NFPA 5000

(2) Table 7.1 provides a number of scenarios that can result in propane release, and the resulting area exposed for different ignition mechanisms. Determine the scenarios that are applicable to the facility, for the quantities that can be released, and enter the greatest value from Table 7.1. Use the hose diameters and length that will be used at the facility if they differ from the ones in Table 7.1 and recalculate the hazard distances using a spreadsheet method that is available at npga.org. Some scenarios may not be applicable to an installation because of other mitigation measures implemented, such as a hose management procedure to minimize the possibility of hose failure.

7.2 Exposure to the Propane Facility From External Events

A large fire or an explosion occurring outside the plant boundary may have detrimental effects on the plant equipment, containers or electrical systems. The most likely scenario is that the LP-Gas plant equipment is affected by intense heat radiation from the external fire.

In order to assess the effects on in-plant personnel, equipment, containers and safety systems from exposure to off-site hazards it is necessary to:

1 Identify industrial or other operations surrounding the LP-Gas plant and also note the type of occupancies surrounding the plant;
2 Discuss with owners of facilities or operations surrounding the LP-Gas plant any potential detrimental effect due to their presence or operations upon the LP-Gas plant;
3 Implement suitable precautions and develop quick notification or other effective communication system protocol between the LP-Gas plant and its neighboring industrial plants, to minimize the potential detrimental effects on a proposed LP-Gas plant from surrounding operations.

The description of the LP-Gas plant surroundings was specified in Form 4.2. Form 7.2 should be completed as a part of the Fire Safety Analysis to note any outside hazards that may affect the integrity of the LP-gas system.

Form 7.2
Exposure to LP-Gas Facility from External Hazards

A	B	C	D
Item #	**Type of Neighboring Operation**	**Hazard exists to the LP-Gas Facility**	
		Yes	**No**
1	Petroleum and other hazardous material storage, wholesale dispensing, etc.		
2	Metal cutting, welding, and metal fabrication		
3	Industrial Manufacturing that can pose external hazards		
4	Ports, rail yards and trans-shipment terminals handling flammable and explosive materials.		
5	Other operations that may pose hazards (gasoline and other hazardous material dispensing stations, fertilizer storage, etc).		

NOTE: If a particular activity indicated in column B does not exist, fill both "Yes" and "No" columns with "NA."

Where a "Yes" has been checked in either Form 7.1 or Form 7.2:
1) For an existing facility, communicate this information to local emergency responders for inclusion in their emergency planning.
2) For a proposed facility, implement the actions indicated in Chapter 9.

External Fire Effects on LPG Containers: An evaluation of the effects of thermal radiation from fires outside the facility on LP containers in the LPG plant was conducted to provide guidance to those using this manual. (This evaluation, the associated mathematical model and detailed results with and without the effects of wind have been published in a peer reviewed

technical journal)[1]. The maximum temperature attained by the vapor-wetted wall of a propane container exposed to heat radiation from an external, non-impinging fire was calculated for various sizes of containers. The assumptions made in regard to the size and location of the external fire included the following:

- The fire used in the model was a highly radiative liquid hydrocarbon pool fire. The value assumed for the heat radiation emanating from this liquid pool fire was greater than that from fires occurring due to the burning of wooden buildings, tires, forest trees, and other flammable liquids such as oil fires, which burn with high degree of smoke production.

- A fire diameter of 100 ft (30.5 m) was used for duration of 30 minutes. This is a very large fire.

- The edge of the fire was located at distances to buildings required by Table 6.3.1 of NFPA 58 and consistent with the size of the container nearest to the plant boundary.

- Convective cooling of the heated surface and the effects of reflective paint on the containers were included.

- Bending of the fire plume towards the containers due to the effects of wind was also included.

The maximum temperatures calculated for the steel surface of the container in contact with vapor in different size containers were as follows:

Container Size Gal. (W.C.)	Maximum Temperature attained in 30 min exposure
1,000	660 ºF
2,000	648 ºF
4,000	507 ºF
12,000	507 ºF
18,000	437 ºF
30,000	384 ºF
60,000	340 ºF

The temperature at which the yield strength of steel of a propane tank begins to decrease is close to 800 ºF. Based on this, there is no threat of propane tank failure from thermal radiation from an external fire occurring at the minimum separation distances specified in Table 6.3.1 of NFPA 58.

[1] Raj, P.K., ”Exposure of a liquefied gas container to an external fire,” Journal of Hazardous Materials, v122, Issues 1-2, p 37-49, June 2005.

CHAPTER 8

Evaluation of Fire Services and Water Supply Requirements

In this chapter the procedure for evaluating the capability and resources of the local fire department (FD) that would respond to an emergency at the LP-Gas facility is discussed. This evaluation includes the training of FD personnel, availability of suitable fire apparatus and equipment, and determination of water requirements if such a system were to be installed at the facility.

8.1 Details of the Fire Service

Use Form 8.1 to record the relevant data on personnel and resources from the local FD or fire company that is responsible for the area where the LP-Gas facility is located. This is a good opportunity to establish a working relationship with the fire department as you will need their support as you go forward with this planning and evaluation process and they will need to understand the facility to provide maximum assistance should an incident occur at the facility.

Analyzing the data from Form 8.1: The designation of the fire fighters as career personnel or volunteers has no bearing on the expertise of the department. The purpose of items 4 and 5 in Form 8.1 is to help determine how fast the initial help might be available. Career fire fighters are in the station and available to respond. Volunteer fire fighters may have to come from home or their place of business. Career fire fighters can normally have a piece of fire apparatus responding within one minute of receiving the call, volunteers may take 4-5 minutes to reach the station before they can respond.

Item # 6 helps determine the level of skill of the fire fighters in the fire department. NFPA 1001, *Standard for Fire Fighter Professional Qualifications*, defines the expertise required of a firefighter to be qualified to Levels I and II. A Level I firefighter can do general fire fighting tasks under close supervision and a Level II firefighter can do those and more tasks under general supervision.

Item # 7A is critical to determining if an effective operation can be conducted. For fighting a fire, at least two firefighters are required for each 125 gpm hose line used. In addition, an incident commander, a safety officer, additional supervisory officers (depending on the size of the incident), and an operator for each piece of fire apparatus that is being used (pumping or performing some other function) is required. Also required is a rapid intervention crew (RIC) of 2 firefighters when the first firefighting crew is deployed into a hazardous area, with that team growing to 4 firefighters when the second and subsequent crews enter the hazardous area. The role of the RIC is to perform a rescue of one or more firefighters that may be injured during the operation.

Item # 7B and Item # 7C help determine the training and knowledge of the fire fighters in hazardous materials and the specific hazards of LP-Gas. NFPA 472 is *Standard for Competence of Responders to Hazardous Materials/Weapons of Mass Destruction Incidents*.

Form 8.1

Data on the Responding Fire Department

A	B		C
Item #	**Data Item**		**Data Entry**
1	Name of the Fire Department (FD).		
2A	Name of the person in the FD assisting with the data acquisition.		
2B	Position of the person in the FD assisting with the data acquisition.		
3A	Date on which FD data was collected.		
3B	Name of the person collecting the data.		
4	Number of firefighters on duty at any time.		
5	Average number of firefighters available for response.		
6A	Number of firefighters qualified to	"Firefighter I" level.	
6B		"Firefighter II" level.	
7A	Number of firefighters who would:	Respond on the first alarm to the facility.	
7B		Respond on the first alarm and who are qualified to the operations level requirements of NFPA 472 or <u>similar</u> local requirements	
7C		Respond on the first alarm with specific knowledge and training on the properties of LP-Gas and LP-Gas fires.	
8A	Number of fire apparatus that have the capability to deploy a 125 gpm hose line supplied by onboard water for at least 4 minutes, and, which:	Are in service in the department.	
8B		Would respond on a first alarm.	

Item # 8A and Item # 8B help determine the capability of fire apparatus that will or could respond to an incident. A 125 gpm hose line is a typical hose line used for firefighting where the fire fighters are expected to advance and maneuver the line while it is flowing.

Response time: Another important consideration of the effectiveness of the Fire Department to respond to an incident is the time it takes the FD to reach the LP-Gas facility. Many fire departments have multiple fire stations or use mutual aid fire companies from other communities to assist them so resources are coming from different locations. It is therefore important to determine the total time for not only the first arriving apparatus but for subsequently arriving apparatus dispatched on the first alarm as well. You will need to work with the fire department and gather this information as well.

Using Form 8.2, determine the time for all resources that would be dispatched on the first alarm to an emergency at the facility. Start by identifying and listing in column A the fire companies that would respond on a first alarm to an emergency. Then, for each company record the time it would take to receive and handle an alarm, for the company to turnout, and the time to respond. If the fire department does not have data that can help, some good averages to use are:

- **Alarm Receipt & Handling Time** - 1 minute for the fire department first receiving the alarm and 3 minutes for mutual aid fire departments,
- **Turnout Time** - 1 minute if the apparatus is staffed by career fire fighters and 4 minutes if the apparatus is staffed by volunteer fire fighters,
- **Travel Time** - 2 minutes for each mile the fire apparatus must travel in an urban/suburban setting and 1.5 minutes for each mile the fire apparatus must travel in a rural setting.

Total the times in columns B, C, and D for each company and enter the sum in Column E. This response time will give you an idea of how long it will take resources to reach the facility gate. Fire fighters must then determine the nature and severity of the emergency, determine how they are going to deal with the emergency, maybe establish a water supply from a hydrant or other source, and implement their attack. This can take anywhere from a couple of minutes to upwards of 30 minutes.

8.2 Water Needs and Availability

The requirements for water to cool a container exposed to a fire are indicated in NFPA 15. A flow rate of 0.25 gpm/ft^2 (10 liter/min/m^2) is specified as being adequate to cool a LP-Gas container exposed to a fire. Since a majority of the containers in the LP-Gas facilities have container penetration for liquid inflow or liquid outflow at only one end of the container and since any product leak occurring at one end and a subsequent fire will affect only the end zone of a container, it has been assumed that the container surface within only one half length of the container needs to be cooled for an effective prevention of damage to the container. Also, calculate the total volume of water required on the basis of a stream flow time of 10 minutes.

Based on these parameters and the surface area of various size ASME containers, the cooling water rate requirements for each container size are determined using Form 8.3. Complete Form 8.3 with information relevant to the facility. Start by identifying the largest container at the facility. Assume that a fire occurs at the end of that container where the appurtenances for

product inflow and outflow are located, and determine whether other containers are within 50 feet of this largest container.

Identify the largest container at the facility and all stationary containers within 50 feet of the largest container. Record in column F of Form 8.3 the largest container. Next, record in Column F the two containers that are within 50 feet of the largest, **and** which have the most surface area exposed to the end of the largest container at which the appurtenances are installed. These are the containers, which are most likely to be affected by a fire occurring at the appurtenances of the largest container. Multiply the number of containers recorded in Column F by the required water flow rate per container in Column E and enters the result in Column G. Sum the values in Column G and enter the sum in Cell 2a, Column G. Round this number up to the next multiple of 125 (i.e. 725 gpm would round up to 750 gpm). This is done because the application of water by the fire department is generally going to be in increments of 125 gpm. Enter that figure in Cell 2b, Column G.

You have now determined the application rate for cooling water that is necessary if the largest container is subjected to fire. Add 250 gpm (Cell 3, Column G) for use by firefighters to protect personnel when approaching the container or its valves to control the flow of product. Sum the numbers in Cells 2b and 3 of Column G. Enter that number in Cell 4, Column G.

To determine the total volume of water required for a 10-minute application time, multiply the total water flow rate in Cell 4, Column G by 10 and enter that figure into Cell 4, Column H.

Form 8.2

Response Time data for the Fire Departments

A	B	C	D	E
Company or Department	**Time in Minutes for**			
	Alarm Receipt & Handling	**Turnout**	**Travel**	**Total Time**

Note: Number in Column E = Sum of numbers from Columns B through D.

Form 8.3

Water Flow Rate and Total Water Volume Required to Cool Containers Exposed to a Fire

A	B	C	D	E	F	G	H
Item #	**ASME Container Size (gallons)**	**Total Surface Area of each Container[1] (ft^2)**	**Surface Area of each container to be Cooled (ft^2)**	**Water flow rate required per container (gpm)**	**Number of containers of the size indicated‡**	**Total Water flow rate required (gpm)**	**Total volume of water required for 10 min (gal)**
1	500	86	43	10.8			
	1,000	172	86	21.5			
	2,000	290	145	36.3			
	4,000	374	187	46.8			
	6,500	570	285	71.3			
	9,200	790	395	98.8			
	12,000	990	495	123.8			
	18,000	1,160	580	145.0			
	30,000	1,610	805	201.3			
	45,000	2,366	1,183	295.8			
	60,000	3,090	1,545	386.3			
	90,000	4,600	2,300	575.0			
	Other Size						
2a	Calculated water flow rate for container protection						
2b	Water flow rate rounded up to nearest multiple of 125						
3	Water for firefighter protection, if required					250	
4	Total water flow rate and volume						

Note: Column D = (1/2) x Column C Column E = 0.25 (gpm/ft^2) x Column D ;

Column G = Column F x Column E Column H = 10 x Column G

Line 2a, Column G and Column H are the sum of numbers in each row above line 2 of each column.

Line 4, Column G and Column H are the sum of numbers in rows 2b and 3.

‡ Consider only 3 containers for water supply evaluations even if the number of containers in a group is more than 3. See Section 8.2.

1 ASME container approximate dimensions

The total water requirement for the facility is indicated in item 4, column G (water flow rate) and column H (total water volume or quantity) of Form 8.3. If multiple groups of containers are present in the facility, repeat the calculations in Form 8.3 for each group of containers. The total water requirement for the facility is the largest value for any single group of containers.

Water Availability Evaluation

If a water system is installed, Form 8.3 calculates the total water requirement for a 10-minute duration. This time period allows for manual shutdown, rescue of any injured, and the possibility of dispersing unignited gas.

If there is a public or private water supply with hydrants available within 1000 feet of the container or containers on which water will be applied, determine the available flow rate from that system with 20 psi residual pressure. The water company may have flow test data or it may be necessary to conduct flow tests. If that flow rate is equal to or greater than the needed flow rate determined using Form 8.3, you can assume your water supply is adequate. If the hydrant flow rate is less than the needed flow rate, determine what other sources of water are available. Sources fall into two categories: water on fire apparatus responding to the incident, and water in rivers, ponds or lakes near the facility. Start by talking with the fire department about whether they have a tanker shuttle capability. Some departments have well-organized operations that can deliver 250 gpm or more on a continuous basis using tanker shuttles. This may be the only capability available or it may be a supplement to a weak hydrant system. Be sure to determine how long it would take to get the water shuttle established.

If there is a river, pond or lake in the area, the fire department may be capable of drafting from that water source and pumping water through hose lines to the facility. There are a number of things that need to be considered before relying on this type of water supply.

1. Can a fire apparatus get close enough to the water source to reach the water with the suction hose it carries (normally 20 feet) and not have the lift (distance from the surface of the water to the center of the pump) greater than 10 feet?
2. Is the water source available year round? Does it dry up in the summer or freeze in the winter? The strainer on the suction hose needs to be at least 2 feet below the surface of the water.
3. Is the water source of adequate size or flow to supply the water needed?
4. Does the fire department have the hose and pumping apparatus to relay the water from the source to the fire?
5. How long will it take to set up this relay?

These factors should be evaluated and discussed with the fire department before any decision is made to use such a supply. It might also be useful to have the fire department conduct an actual timed drill to deliver the needed water supply to the facility site using the normally responding complement of personnel and equipment.

Complete Form 8.4 to document the water supply that will be available to the facility site.

Form 8.4

Evaluation of Water Availability in or Near the LP-Gas Facility

A	B	C	D		
Item #	**Water from…**	**Available?**	**Quantitative information**		
1	Public supply or from another piped-in supply through one or more fire hydrants in or near the facility	☐ Yes ☐ No	Hydrant data	Distance from Container(s) on which water will be applied (feet)	Available water flow rate from all hydrants[1] (gpm)
			Hydrant 1		
			Hydrant 2		
			Hydrant 3		
2	A nearby static water source (stream, pond, lake, etc).	☐ Yes ☐ No	Distance to water source = _____ Feet Time to set up relay = _____ min. Rate of delivery = _____ gpm		
3	Only through mobile water tanker shuttle.	☐ Yes ☐ No	Time to set up shuttle = _____ min. Sustainable flow rate = _____ gpm		

(1) Obtain the available flow rate from the local municipal water authority or the entity that supplies water to the hydrant or conduct a test to determine total available flow rate.

Having the water available does not guarantee that the fire department has the resources to apply the water in a timely manner. Completed Form 8.2 will indicate how much time it will take for the fire department to have initial resources at the facility and how long before additional resources will be on-site. If the capability to apply cooling water within the first 10 minutes of initial fire exposure to the container is not present, extremely dangerous conditions could begin to develop. Note that it will take several minutes after the apparatus arrives at the facility gate before cooling water is actually applied to the containers and that hand held hose lines will be used with water supplied from the water tank on the apparatus. Even if hydrants are available, the staffing on the first arriving fire apparatus will probably not be sufficient to establish a water-supply from the hydrant. Depending on the hydrant system and the fire department's standard operating guidelines, it may be necessary to connect a pumper to the hydrant. If the distance is over 1000 ft. it may also be necessary to use hose from more than one fire apparatus to reach the hydrant and in some cases, to use intermediate pumpers in the hose line to boost the pressure.

Form 8.1 contains information on responding apparatus capable of applying 125 gpm for 4 minutes. This is adequate to begin operations for a single container of 30,000 gallons or less water capacity if no other adjacent containers are exposed to the fire. However, a continuous water supply then has to be established within that 4 minutes or other apparatus must be available with onboard water to continue the cooling until a continuous water supply is set up. A larger facility or multiple containers exposing each other is a different situation. In those cases, cooling water may need to be applied using larger hand held hose lines or ground monitors to achieve the reach necessary with the water stream. Both of these require considerably more water than may be supplied by 125 gpm hose lines. Unless a hydrant system with an adequate flow rate is readily available, the time needed to establish an adequate water supply from remote hydrants, a relay operation from a static water source, or a sustainable tanker shuttle operation will greatly exceed the initial 10 minutes of fire exposure to the container and dangerous conditions could begin to develop. For these facilities, a fixed water spray system is the only practical means by which adequate protection can be provided to installations consisting of multiple 30,000 gallon or larger containers.

Using the data you have gathered, it is recommended that you discuss with the fire department the resources available to protect the facility. This would include evaluating the knowledge and training of the fire fighters who would be arriving at the facility.

1) For an existing facility, communicate this information to local responders for inclusion in their emergency planning.
2) For a proposed new facility, refer to Chapter 9

CHAPTER 9

Evaluation Summary for a Proposed New LP-Gas Facility

In this chapter the results of analyses performed in Chapter 4 through Chapter 8 for a proposed (new) LP-Gas facility are summarized. If noncompliance with NFPA 58-2008 is found, the design must be altered to bring the proposed facility into compliance. In some cases, several alternative approaches for complying with the Code are presented.

Complete Form 9.1, Form 9.2 and Form 9.3 (and if necessary, Form 9.4 and Form 9.5) and implement any necessary changes to the design to bring the new facility into compliance with the Code.

Form 9.1

Analysis Summary on Product Control and Local Conditions of Hazard

A	B	C	D	E
Item #	**CHAPTER Title**	**Section & Title**	**Reference FORM #**	**Number of "No" checked**
1	Product Control Measures in Containers & Transfer Piping	5.1: Product Control in Containers	5.1 or 5.2 or 5.3 or 5.4§	
		5.2 Product Control in Transfer Piping	5.5	
			5.6	
			5.7	
			5.8	
			5.9	
2	Analysis of Local Conditions of Hazard	6.1 Physical Protection Measures	6.1	
		6.2 Ignition Source Control	6.2	
		6.3.1 Separation distances; Container and outside exposures	6.3	
		6.3.2 Separation distances; Transfer points and outside exposures	6.4	
		6.4 Special Protection Measures	6.5	
			6.6	

§ The number of "No" for Forms from Chapter 5 is the difference between the required number of appurtenances according to NFPA 58-2008, and a lesser number found to be actually installed on the container or the transfer piping.

If, in any row of column E ("No") of Form 9.1, the entry number is greater than zero, the proposed LP-Gas facility is not in compliance with the requirements of NFPA 58-2008 for product control appurtenances or other safety measures. The design of the proposed facility must be modified to conform to the Code requirements. In addition, the following items should be noted.

- If there are any "No" checks in Form 6.3, then the separation distance requirements for containers are not satisfied. An option that may be considered is the reduction in separation distance to 10 feet for underground and mounded containers by providing "Redundant and Fail-Safe Product Control Measures." In this case, complete Form 9.4 below to ensure that each requirement of "Redundant and Fail-Safe Product Control Measures" is provided.

- If there are any "No" checks in Form 6.4, then the separation distance requirements for transfer points are not satisfied. In this case, relocate the transfer points so that the separation distances conform to the code requirements or provide the Low Emission Transfer Equipment. Complete Form 9.5 below and ensure that all requirements for Low Emission Transfer Equipment are fulfilled.

Form 9.2

Analysis Summary on Exposure from and to the LP-Gas Facility

A	B	C	D	E
Item #	**CHAPTER Title**	**Section & Title**	**Reference FORM #**	**Number of "Yes" checked**
1	Exposure to and from Other Properties	7.1 Exposure to off-site properties and persons from in-plant propane releases	7.1	
		7.2 Exposure to propane facility from external events.	7.2	

If the entry number in column E ("Yes"), Form 9.2 corresponding to Form 7.1 is greater than zero, consider one or more of the following design alternatives.

1 Consider moving the container or the transfer point to a different location, if possible and space exists, so that the property or the person is beyond the hazard distance.
2 Provide "Redundant and Fail-safe Product Control Measures". Complete Form 9.4 to ensure compliance.
3 Institute other technical measures such as installing gas and flame detectors (connected to facility shut down systems), sounding alarm outside facility premises, etc.
4 Institute administrative controls such as additional training for personnel, more frequent inspections of hoses and transfer piping, etc.

If the entry number in column E ("Yes"), Form 9.2 corresponding to Form 7.2 is greater than zero, consider one or more of the following design alternatives.

1 Implement procedures to monitor neighboring activity.
2 Install means in the adjacent plant to shut down the LP-Gas plant in case of an emergency in that plant.

Form 9.3
Analysis Summary on Fire Department Evaluations

A	B	C	D	E	F
Item #	**CHAPTER Title**	**Section & Title**	**Reference FORM #**	**Number "zeros" entered in Column C, Lines 6 through 8 of Form 8.1**	**Number of "Yes" checked in Column C of Form 8.4**
1	Fire department capability, adequacy of water supply and Emergency Planning	8.1 Data on the Fire Department	8.1		
2		8.2 Fire response water needs and availability	8.4		

If the entry number in row 1, Column E of Form 9.3 is greater than zero, consider one or more of the following design alternatives.

1 Discuss with the local Fire Department the needs of the LP-Gas facility and the evaluation results on the capability and training inadequacies of the Department.

2 Consider developing a cadre of personnel within the LP-Gas facility to respond to emergencies.

3 Institute container special protection system based on active protection approaches or passive approaches. Complete Form 9.6 and Form 9.7 below.

If the entry number in row 2, Column F of Form 9.3 is equal to zero, consider one or more of the following design alternatives.

1 Provide special protection (other than water spray or monitor systems) to containers, satisfying the requirements of section 6.23.5 of NFPA 58, 2008 edition. Complete Form 9.6 to ensure compliance.

2 Consider implementing the various options indicated in Table 9.1.

Form 9.4
Redundant and Fail-Safe Design for Containers

A	B		C	D	E	F
Item #	**Description**		**Features**	**Proposed for the facility?**		**NFPA 58 Section Reference (2008 Edition)**
				Yes	**No**	
1	Container Sizes for which the appurtenances are provided		Appurtenances and redundant fail-safe equipment and Low Emission transfer lines are provided for <u>each</u> container of water capacity 2,001 gal to 30,000 gal			6.26.4 and 6.26.5
2	Liquid or Vapor Withdrawal (1-1/4 in. or larger)		Internal Valve with integral excess flow valve or excess flow protection			6.26.3.1
			Positive Shutoff Valve installed as close as possible to the Internal Valve			6.26.3.4
3	Liquid or Vapor Inlet		Internal Valve with integral excess flow valve or excess flow protection or Back Flow Check valve			6.26.3.5
			Positive Shutoff Valve installed as close as possible to the Internal Valve or the back flow check valve			6.26.3.5
4	Railcar Transfer	Flow Into or Out of Railroad tank car	Emergency shutoff valve installed in the transfer hose or the swivel-type piping at the tank car end.			6.18.2.6 (1) and 6.26.4.1
		Flow Only Into railroad tank car	Emergency shutoff valve or backflow check valve installed in the transfer hose or the swivel-type piping at the tank car end.			6.18.2.6 (2) and 6.26.4.1
5	Cargo Tank Transfer		Protection provided in accordance with 6.26.4.1			6.26.4.1
6	Automatic closure of all primary valves (IV & ESV) in an Emergency		By fire actuation			6.26.4.2
			In the event of a hose pull-away due to vehicle motion			6.26.4.2
7	Manually operated remote shutdown of IV and ESV		Remote shutdown station within 15 ft of the point of transfer?			6.26.4.3 (A)
			Another remote shutdown station between 25 ft and 100 ft of the transfer point?			6.26.4.3 (B)
			Shutdown stations will shut down electrical power supply, if any, to the transfer equipment and primary valves?			6.26.4.3
			Signs complying with the requirements of 6.24.4.3 (C) provided?			6.26.4.3 (C)

Note: If your facility does not have a rail terminal, write the word NA in both the "Yes" column and the "No" column in item 4 of the form in the railroad tank car row. Similar option is also available if there is no cargo tank vehicle transfer station.

Form 9.5
Evaluation of Low Emission Transfer Equipment

A	B	C		D	E	F
Item #	**Description**	**Features**		**Proposed for the facility?**		**NFPA 58 Section Reference (2008 Edition)**
				Yes	**No**	
1	Transfer into Cylinders or ASME Containers on Vehicles	Delivery Nozzle and Filer Valve-Max. Liquid Release after transfer of 4 cc.	Fixed Maximum Liquid Level Gauge not used during transfer operations			6.26.5.1 (B)
2	Transfer into Stationary ASME Containers Delivery valve and nozzle combination	During product transfer or post transfer uncoupling of the hose, liquid product volume released to the atmosphere	Does not exceed 4 cc (0.24 in^3) from a hose of nominal size 1 in or smaller			6.26.5.1 (A)
			Does not exceed 15 cc (0.91 in^3) from a hose of nominal size larger than 1 in.			6.26.5.2 (B)
3	Transfer into Stationary ASME Containers Maximum filling limit	Do containers less than 2,001 gal (w.c.) have an overfilling prevention device or another approved device?				6.26.5.2 (F)
		Do containers greater than 2,000 gal (w.c.) have a float gage or other non-venting device?				6.26.5.2 (E)
4	Transfer into Stationary ASME Containers Fixed Maximum Liquid Level gauge	Not used during routine transfer operations but may be used in calibrating other non-venting liquid level gauges in the container				6.26.5.2 (C,D)

Note: If the facility does not have a particular feature described in the table, write "NA" in both the "Yes" and "No" columns corresponding its row in item 2.

Form 9.6
Special Protection Measures –Passive Systems

A	B	C	D		E
Item #	**Special Protection Option**	**Question**	**Proposed for the facility?**		**NFPA 58 Section Reference (2008 Edition)**
			Yes	**No**	
1	Container Insulation	Insulation provided on each of the containers?			6.25.5.1
		Insulation material complies with the requirements of section 6.25.5.1 of NFPA 58?			6.25.5.1 and 6.25.5.2
2	Mounding of containers	Each container in the facility is mounded?			6.25.5.3
		Mounding complies with each requirement under section 6.6.6.3 of NFPA 58.			6.25.5.3
3	Burying of containers	Each container in the facility is buried?			6.25.5.4
		Buried containers comply with each requirement under section 6.6.6.1 of NFPA 58.			6.6.6.1 & 6.25.5.4

Form 9.7
Special Protection Measures –Active Systems

Item #	**Special Protection Option**	**Question**	**Is the Facility compliant?**		**NFPA 58 Section Reference (2008 Edition)**
			Yes	**No**	
1	Water spray systems	Are fixed water spray systems, complying with NFPA 15 requirements, used for each container in the facility?			6.25.6.1
		Do fire responsive devices actuate water spray system automatically?			6.25.6.2
		Can the water spray systems be actuated manually also?			6.25.6.2
2	Monitor nozzle systems	Are the monitor nozzles located and arranged so that the water stream can wet the surfaces of all containers exposed to a fire?			6.25.6.3
		Can the water stream from a monitor nozzle reach and wet the entire surface of, at least, one half of a length from one end of each of the containers it is designed to protect?			6.25.6.3
		Do fixed monitor nozzles comply with NFPA 15 requirements?			6.25.6.1
		Do fire responsive devices actuate the monitor nozzles?			6.25.6.2
		Can the monitor nozzles be actuated manually also?			6.25.6.2

Equivalent Protection to a Water Supply for Industrial and Bulk Facilities

In the case where water supply is not available in or near the LP-Gas facility, or is inadequate or it is prohibitively expensive to connect to a public or private water supply hydrant, alternative methods for providing protection should be considered. In lieu of providing a water supply, several alternatives are indicated in Table 9.1, which can offer an equivalency to a water supply system.

The intent of the controls identified in Table 9.1 is to maintain the entire system as a gas tight entity. These methods include reducing the service life of equipment, increasing the design pressure rating of the system beyond the requirements of NFPA 58, or providing early detection and isolation of the system to ensure product control. This list is not exhaustive and is not ranked in an order of priority.

Table 9.1
Suggested Alternative Methods for Industrial and Bulk Plants That Do Not Pose a Hazard But Lack a Water Supply

Item #	Possible options to implement when adequate water supply is not available
1	Reduce the service life of hoses.
2	Increase frequency of equipment inspection.
3	Establish a service life program for the maintenance of the container pressure relief devices. This could include the installation of a listed multiple port valve and certifying that the relief devices are properly set and maintained every 5 to 10 years.
4	Increase the design strength of the piping and fitting systems.
5	Install emergency shutoff valves in conjunction with container internal valves.
6	Install emergency shutoff valves downstream of transfer pump outlets and upstream of the vapor and liquid valves at the bulkhead.
7	Install pneumatic tubing along the facility boundary to serve as a perimeter fire detection system. This would provide protection of the facility against exposure fires.
8	Provide optical flame detection or linear heat detection, or a gas detection system connected to an isolation valve installed downstream of every liquid and vapor nozzle on the container. This system could also be monitored to send a signal to an alarm company that notifies the Fire Department of an event.
9	Increase the separation distances of internal facility exposures to the container. These exposures would include a site dumpster, idle or waste pallets and combustibles, and increasing the parking distances between the bobtails and transports in relation to the container.
10	Relocate overhead power lines away from all container and cylinder storage areas to protect against ignition in the event of a line dropping due to wind or power pole impact.
11	Eliminate all combustible vegetation within 30 feet of the LP-Gas container. This can be accomplished using gravel, or paving the site yard.
12	Install tanks using the mounding or burial method.

CHAPTER 10

Fire Safety Analysis Examples

In this chapter, the use of the Fire Safety Analysis described in the previous chapters is illustrated with specific examples. Four different LP-Gas facility scenarios are considered. The assumptions made on the design, location and other features of the facility are indicated and the FSA procedure is illustrated using the fill-in forms discussed in earlier chapters. The four different facilities have been chosen to be a representative (though not all-inclusive) sample of the LP-Gas facility characteristics found in the US.

In the examples below, the form numbers indicated are the same as in the main body of the manual. Also, each example is illustrated schematically with a map showing the characteristics of the facility.

10.1 Illustrative Example # 1

LP-Gas Facility:

Four 1,800-gallon containers are located within an industrial area and within the property boundary of a small rural manufacturing plant. The customer plant is supplied with vapor from the containers. There is no separate vaporizer but the container pressure is used for the vapor service.

Other Facility Information:

1) The containers are located at about 130 ft. to the east of the manufacturing plant, next to a parking area. The parking area extends 150 ft. north and 25 ft. to the east of the container area.
2) A main road exists to the south of the container area at a distance of 70 ft.
3) The vapor line into the building is an underground line and is cathodically protected.
4) The container area is surrounded by commercial grade galvanized highway guardrail with 3 ft. clearance all around within the container area.
5) Liquid filling is through a manifolded, 2-inch line. There is no liquid withdrawal except for the emergency withdrawal connection at the top of each container. A backflow check valve is installed at an unloading bulkhead.
6) Only vapor is withdrawn at the top of the containers. The vapor service line is manifolded and is 1-1/2" underground to the building.
7) The containers do not have any special protection. Also, no redundant & fail-safe system is provided for the containers.
8) There is no property within 250 ft. hazard distance from the containers.
9) There are no public water supply hydrants near the facility. Also, there is no other water source nearby to the manufacturing facility property line; however, water is available from a pond 5 miles from the facility.
10) The nearest fire department is a distance of 3 miles and is staffed with volunteer firefighters. Generally, no one is present at the fire station at all times; but any fire alarm is communicated to all volunteers through a horn. The next nearest fire department is 15 miles away and also is manned with volunteer fire fighters.

Figure 10.1 shows a schematic plan view of the LP-Gas facility used in Example1.

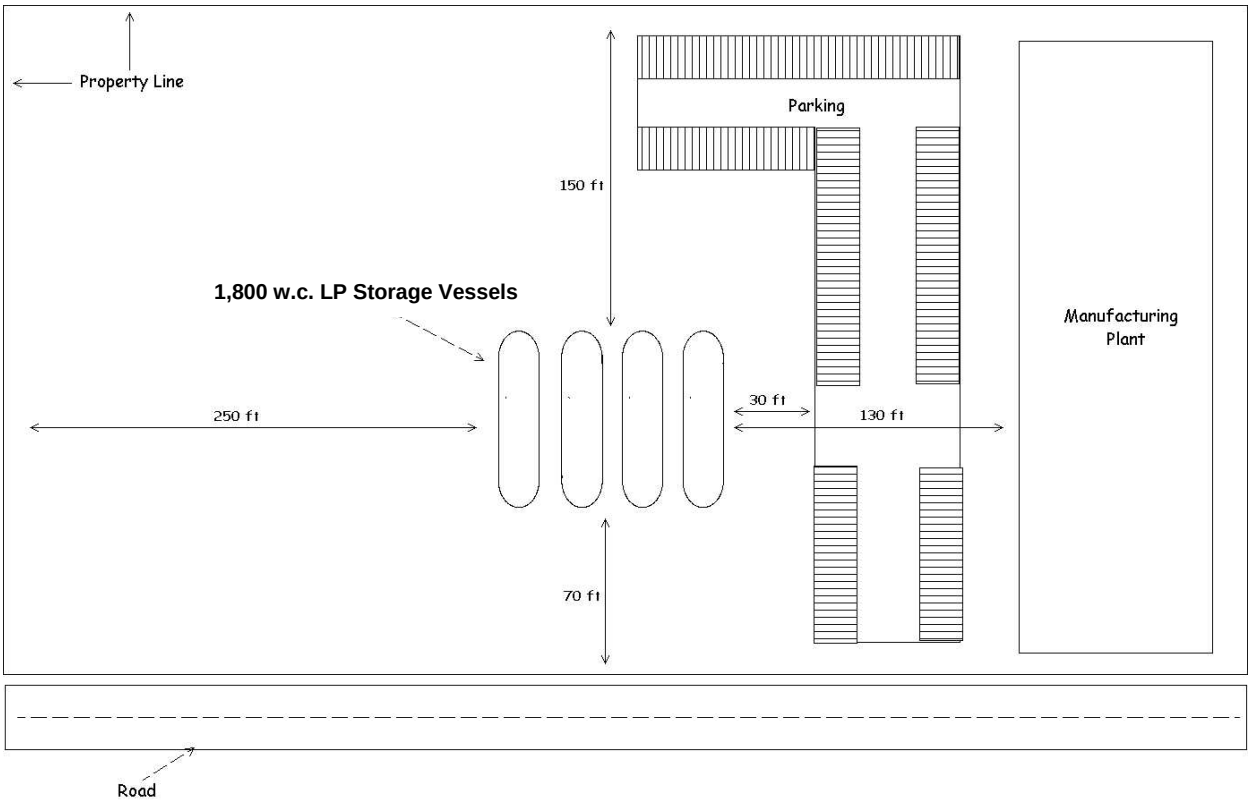

Figure 10.1 Schematic plan view of a LP-Gas facility used in Example 1

Form 4.1
Initial Data on the LP-Gas Facility

A	B	C
Item #	**Information Item**	**Data**
1	Name of the LP-Gas Facility Owner or Operator	**ABC Propane Co., Inc.**
2	Contact Name:	
3	Contact Telephone & Fax Numbers	
4	Contact Email Address	
5	Mailing Address	Street 1:
		Street 2:
		City, State, Zip:

Form 4.2
Facility Storage Capacity [1,2,3]

A	B	C	D
Item #	**Individual Container Water Capacity (w.c.) (gallons)**	**Number of containers**	**Total Water Capacity (w.c.) of each container size (gallons)**
1	500		
	1,000		
	2,000		
	4,000		
	10,000		
	18,000		
	30,000		
	60,000		
	Other:	4	7,200
	Other:		
	Other:		
	Other:		
2	**Aggregate Water Capacity[4]**	**4**	**7,200**

Notes:
(1) Column D = Column B x Column C.
(2) Parked bobtails, transports and tank cars should not be considered for aggregate capacity calculations.
(3) Do not consider containers that are not connected for use.
(4) For the purpose of this manual, "Aggregate Water Capacity" means any group of single ASME storage containers separated from each other by distances less than those stated in the aboveground containers column of Table 6.3.1.

Form 4.3
Additional Information on the LP-Gas Facility

☑ Existing Facility; Built to NFPA 58 Edition __**1992**___ ☐ Proposed Facility

a) Name of the Plant (if applicable) _____**ABC Propane Co., Inc.**_____

b) Type of LP-Gas Plant: ☐ Commercial ☑ Industrial ☐ Bulk Plant

c) Facility is located in ☑ Rural Area, ☐ Suburban Area, ☐ City Commercial Zone
☐ City Industrial Zone

d) Facility neighbors[§]: ☐ Agri. fields ☐ Commercial Bldgs ☐ Flammable Liquids Storage
(Check all that apply) ☑ Industrial Activity (metal fabrication, cutting and welding, etc)
☐ Manufacturing ☐ Others (explain) _____

e) Geographic Location of Plant:
Address: _____
_____

f) Landmarks, if any: _____
_____

g) LP-Gas liquid supply by: ☑ Bobtail ☐ Truck Transport ☐ Rail Tank Car
(Check all that apply) ☐ Pipeline

h) LP-Gas Distribution by: ☐ Bobtail ☐ Truck Transport ☑ Vapor Piping
Plant (Check all that apply) ☐ Liquid Piping ☐ Dispensing or Vehicle fueling

i) Number of vehicle entrances: ☑ One ☐ Two ☐ More than two

j) Type of access roads to the plant: ☑ Rural ☐ City or Town ☐ Highway
(One check per line) Entrance 1 ☐ Dirt road ☑ Gravel road ☐ Paved
(One check per line) Entrance 2 ☐ Dirt road ☐ Gravel road ☐ Paved

k) Staff presence ☐ Not staffed ☑ Only during transfer operations
☐ Staffed always (24/7) ☐ Only during business hours
☐ Other (Explain) _____

l) Location and distances to Assembly, Educational or Institutional Occupancies surrounding the facility, if any, within 250 ft from the facility boundary in the direction of the assets.
___Institutional or other occupancies do not lie within 250 ft., of the facility._____
_____

m) Is an overview plot plan of the facility attached? ☑ Yes ☐ No

§ All properties either abutting the LP-Gas facility or within 250 feet of the container or transfer point nearest to facility boundary.

Form 5.1

Compliance with Code Requirements for Appurtenances on Containers of 2,000 Gallons Water Capacity or Less

A	B	C	D	E
Container #	**Service Configuration Sub Figure (in Figure 5-1)**	**Number of Product Control Appurtenances**		**NFPA 58 Section Reference (2008 edition)**
		Required by NFPA 58 (applicable edition)	**Installed on the Container**	
1	**5-1A**	**5**	**5**	5.7.4.1 and Table 5.7.4.1
2	**5-1A**	**5**	**5**	
3	**5-1A**	**5**	**5**	
4	**5-1A**	**5**	**5**	
5				
6				

Form 5.5
Requirements for Transfer Lines of 1½-inch Diameter or Larger, Liquid-into-Containers

A	B	C	D	E	F
Item #	**Appurtenance (Either No. 1 or No. 2)****	**Appurtenance Provided with the Feature**	**Installed in the facility?**		**NFPA 58 Section Reference (2008 edition)**
			Yes	**No**	
1	Emergency Shutoff Valve (ESV) (Ref § 6.12)	Installed within 20 ft. of lineal pipe from the nearest end of the hose or swivel-type connections.	N.A.		6.12.2
		Automatic shutoff through thermal (fire) actuation with melting point of thermal element < 250 ^{o}F	N.A.		6.12.6
		Temperature sensitive element (fusible link) installed within 5 ft from the nearest end of the hose or swivel type piping connected to liquid transfer line.	N.A.		6.12.6
		Manual shutoff feature provided at ESV installed location.	N.A.		6.12.10 (1)
		Manual shutoff device provided at a remote location, not less than 25 ft., and not more than 100 ft. from the ESV.	N.A.		6.12.10 (2)
		An ESV is installed on each leg of a multi leg piping each of which is connected to a hose or a swivel type connection on one side and to a header of size 1½ inch in diameter or larger on the other side.	N.A.		6.12.5 6.18.2.6 (1)
		Breakaway protection is provided such that in any pull-away break will occur on the hose or swivel-type connection side while retaining intact the valves and piping on the plant side.	N.A.		6.12.8
2	Back flow Check Valve (BCK)**	Installed downstream of the hose or swivel-type connection	√		6.12.8
		BCK is designed for this specific application.	√		6.12.4
		A BCK is installed on each leg of a multi leg piping each of which is connected to a hose or a swivel type connection on one side and to a header of 1½ inch in diameter or larger on the other side.	√		6.12.5
		Breakaway protection is provided such that in any pull-away break will occur on the hose or swivel-type connection side while retaining intact the valves and piping on the plant side.	√		6.12.8

** In lieu of an emergency shutoff valve, the backflow check valve (BCK) is only permitted when flow is only into the container and shall have a metal-to-metal seat or a primary resilient seat with metal backup, not hinged with a combustible material (6.12.3, 6.12.4)

Form 5.7
Requirements for Vapor Transfer Lines 1¼-inch Diameter or Larger

A	B	C	D	E	F
Item #	**Appurtenance**	**Appurtenance Provided with the Feature**	**Installed in the facility?**		**NFPA 58 Section Reference (2008 edition)**
			Yes	**No**	
1	Emergency Shutoff Valve (ESV) (Ref § 6.12.1)	Installed within 20 ft. of lineal pipe from the nearest end of the hose or swivel-type connections.	√		6.12.2
		Automatic shutoff through thermal (fire) actuation with melting point of thermal element < 250 ^{o}F	√		6.12.6
		Temperature sensitive element installed within 5 ft from the nearest end of the hose or swivel type piping connected to liquid transfer line.	√		6.12.6
		Manual shutoff feature provided at ESV installed location.	√		6.12.10 (1)
		Manual shutoff device provided at a remote location, not less than 25 ft., and not more than 100 ft. from the ESV.	√		6.12.10 (2)
		An ESV is installed on each leg of a multi leg piping each of which is connected to a hose or a swivel type connection on one side and to a header of 1-1/4 inch in diameter or larger on the other side.	√		6.12.5 6.18.2.6 (1)
		Breakaway protection is provided such that in any pull-away break will occur on the hose or swivel-type connection side while retaining intact the valves and piping on the plant side.	√		6.12.8
2	Back flow Check Valve (BCK)**	Installed downstream of the hose or swivel-type connection			6.12.8
		BCK is designed for this specific application.			6.12.3 and 6.12.4
		A BCK is installed on each leg of a multi leg piping each of which is connected to a hose or a swivel type connection on one side and to a header of 1-1/4 inch in diameter or larger on the other side.			6.12.5
		Breakaway protection is provided such that in any pull-away break will occur on the hose or swivel-type connection side while retaining intact the valves and piping on the plant side.			6.12.8

** In lieu of an emergency shutoff valve, the backflow check valve (BCK) is only permitted when flow is only into the container and it shall have a metal-to-metal seat or a primary resilient seat with metal backup, not hinged with a combustible material (6.12.3, 6.12.4).

Form 6.1
Evaluation of Physical Protection and Other Measures

A	B	C	D	E	F
#	Item	Features	Installed in the facility?		NFPA 58 Section Reference (2008 Edition)
			Yes	No	
1	Lighting‡	Provide lighting for nighttime operations to illuminate storage containers, container being loaded, control valves, and other equipment	√		6.18.5
2	Vehicle impact protection	Protection against vehicular (traffic) impacts on containers, transfer piping and other appurtenances is designed and provided commensurate with the size of vehicles and type of traffic in the facility. (Example protection systems include but not limited to (1) Guard rails, (2) Steel bollards or crash posts, (3) Raised sidewalks.	√		6.9.3.10 and 6.19.3.2
3	Protection against corrosion	Provide protection against corrosion where piping is in contact with supports or corrosion causing substances.		√	6.9.3.11
Complete only 4A or 4B					
4A	Perimeter Fence	Is an industrial type or chain link fence of at least 6 ft high or equivalent protection provided to enclose (all around) container appurtenances, pumping equipment, loading and unloading and container filling facilities?	√		6.18.4.2
		Are at least two means of emergency accesses (gates) from the enclosure provided? **NOTE: Write "N.A." (not applicable) if** (i) The area enclosed is less than 100 ft^2, or (ii) The point of transfer is within 3 ft of the gate, or containers are not filled within the enclosure		√	6.18.4.2 (A)
		Is a clearance of at least 3 feet all around to allow emergency access to the required means of egress been provided?	√		6.18.4.2 (B)
	Guard Service	If a guard service is provided, does this service cover the LP-Gas plant and are the guard personnel provided with appropriate LP-Gas related training, per section 4.4 of NFPA 58?	NA		6.18.4.3
4B	Lock-in-Place devices	Are Lock-in-Place devices provided to prevent unauthorized use or operation of any container appurtenance, system valves, or equipment in lieu of the fence requirements above?	NA		6.18.4.2 (C)

Note: Fill only items 1, 2, 3, and 4A or 4B. Indicate with "NA" when not filling the "Yes" or "No" column.
‡ Indicate with "NA" if the facility is not operated at night.

Form 6.2
Assessment of Sources of Ignition and Adjacent Combustible Materials

A	B	C	D	E
#	**Sources of Ignition and Requirements Pertaining to Adjacent Combustible Materials**	**Is the Facility compliant?**		**NFPA 58 Section Reference (2008 Edition)**
		Yes	**No**	
1	Are combustible materials, weeds and tall grass not closer than 10 ft. from each container?	√		6.4.5.2
2	Is a distance at least 20 ft. provided between containers and tanks containing flammable liquids with flash point less than 200 ^{o}F (ex., gasoline, diesel)?	√		6.4.5.5
3	Are electrical equipment and wiring installed per Code requirements?	√		6.22.2
4	Is open flame equipment located and used according to Code?	√		6.22.3.1
5	Are ignition control procedures and requirements during liquid transfer operations complied with.?	√		7.2.3.2
6	Is an approved, portable, dry chemical fire extinguisher of minimum capacity 18 Lbs. and having a B:C rating provided in the facility?	√		6.25.4.2
7	Is an approved, portable, dry chemical fire extinguisher of minimum capacity 18 Lbs. and having a B:C rating provided on each truck or trailer used to transport portable containers?	√		9.4.7
8	Is the prohibition on smoking within the facility premises strictly enforced?	√		7.2.3.2 (B) & 9.4.10

Note: Insert "NA" in both "Yes" and "No" columns of any items that are not applicable.

Form 6.3

Separation Distances from Containers to Buildings, Property Lines that can be Built upon, Inter-container Distances, and Aboveground Flammable or Combustible Storage Tanks

A	B	C	D	E	F	G
#	Container Size Range in gal (W.C.)	Separation between a property line, important building or other property and the <u>nearest</u> container which is	Minimum Distance (ft)	Is the Facility compliant?		NFPA 58 Section Reference (2008 Edition)
				Yes	No	
1	501 through 2,000	Above Ground	25	√		6.3.1 and Table 6.3.1
		Underground or Mounded	10	NA	NA	
		Between containers	3	√		
2	2,001 through 30,000	Above Ground	50	NA	NA	
		Underground or Mounded	50	NA	NA	
		Between containers	5	NA	NA	
3	30,001 through 70,000	Above Ground	75	NA	NA	
		Underground or Mounded	50	NA	NA	
		Between containers	¼ sum of diameters of adjacent containers	NA	NA	
4	70,001 through 90,000	Above Ground	100	NA	NA	
		Underground or Mounded	50	NA	NA	
		Between containers	¼ sum of diameters of adjacent containers	NA	NA	
5	All sizes greater than 125 gal	Separation distance between a LP-Gas container and an above ground storage tank containing flammable or combustible liquids of flash points below 200 ^{o}F.	20	NA	NA	6.4.5.4 and 6.4.5.5

Note: If any of the container sizes indicated in the above form are not present in the facility, enter "NA" in both Yes and No columns..

Form 6.4
Separation Distances between Points of Transfer and other Exposures

A	B		C	D	E	F	G
#	Type of Exposure within or outside the facility boundary		Check if exposure is present	Minimum Distance (ft)	Is the Facility compliant?		NFPA 58 Section Reference (2008 Edition)
					Yes	No	
1	Buildings, mobile homes, recreational vehicles, and modular homes with fire-resistive walls			10	NA	NA	Section 6.5.3 Table 6.5.3
2	Buildings with other than fire resistive walls			25	NA	NA	
3	Building wall openings or pits at or below the level of the point of transfer			25	NA	NA	
4	Line of adjoining property that can be built upon			25	NA	NA	
5	Outdoor places of public assembly, including school yards, athletic fields, and playgrounds			50	NA	NA	
6	Public ways, including public streets, highways, thoroughfares, and sidewalks	From points of transfer in LP-Gas dispensing stations and at vehicle fuel dispensers.		10	NA		
		From other points of transfer	√	25	√		
7	Driveways			5	NA	NA	
8	Mainline railroad track centerlines			25	NA	NA	
9	Containers other than those being filled			10	NA	NA	
10	Flammable and Class II combustible liquid dispensers and aboveground and underground containers			20	NA	NA	
11	Flammable and Class II combustible liquid dispensers and the fill connections of LPG containers			10	NA	NA	
12	LP-Gas dispensing device located close to a Class I liquid dispensing device.			10	NA	NA	6.24.4.3

NOTE: Place a checkmark in column C against an exposure that is present in or around the facility. Fill columns E or F for only those rows for which there is a checkmark in column C.

Form 6.5
Special Protection Measures –Passive Systems

A	B	C	D		E
#	Special Protection Option	Question	Is the Facility compliant?		NFPA 58 Section Reference (2008 Edition)
			Yes	No	
1	Container Insulation	Insulation provided on each of the containers?	N.A.		6.25.5.1
		Insulation material complies with the requirements of section 6.25.5.1of NFPA 58?	N.A.		6.25.5.1 and 6.25.5.2
2	Mounding of containers	Each container in the facility is mounded?	N.A.		6.25.5.3
		Mounding complies with each requirement under section 6.6.6.3 of NFPA 58.	N.A.		6.25.5.3

3	Burying of containers	Each container in the facility is buried?	N.A.		6.25.5.4
		Buried containers comply with each requirement under section 6.6.6.1 of NFPA 58.	N.A.		6.6.6.1 & 6.25.5.4

Form 6.7
Protection Against Vehicular Impact

#	System Protected	Is physical protection provided?		Type of physical protection installed
		Yes	No	
1	Storage containers	√		Steel Highway Guardrail
2	Transfer stations	√		Steel Highway Guardrail
3	Entryway into plant	N.A.		

Table 7.1
Distances to Various Types of Propane Hazards Under Different Release Models**

Model #	Details of the Propane Release Model Releases from or due to		Vapor Dispersion Distance to LFL (ft)	Explosion Hazard Distance (ft)	Fire Ball Radiation Distance (ft)
1A	Bobtail hose failure. Release of the entire inventory in the hose, quickly.	1" ID x 150 ft hose length	250	110	50
1B		1" ID x 120 ft hose length	230	103	45
1C		1" ID x 75 ft hose length	190	90	40
2a	Release of the inventory in a transfer piping 1" x 30 ft + @ 20 gpm for 10 min., due to failed excess flow valve.		135	120	25
2b	Release of the inventory in a transfer piping 2" x 30 ft + @80 gpm for 10 mins.		230	252	48
2c	Release of the inventory in a transfer piping 2" x 80 ft. @ 70 gpm for 10 mins.		328	235	74
2d	Release of the inventory in a transfer piping 2.5" x 30 ft @80 gpm for 10 mins.		269	252	59
2e	Release of the inventory in a transfer piping 3" x 30 ft + @100 gpm for 10 mins.		312	287	69
2f	Release of the inventory in a transfer piping 3" x 18 ft + @100 gpm for 10 mins.		256	284	55
3	Release from the container pressure relief valve		No ignitable vapor concentration at ground level		
4	Release from a 1" ID x 150 ft transfer piping to a vaporizer and reduced flow from a partially open excess flow valve @ 20 gpm for 10 min.		250	120	50
5	Leak from a corrosion hole in a transfer pipe at a back pressure of 130 psig (corresponding to 80 ^{o}F) for 60 min. Hole size is ¼" ID.		110	120	5
6	Release of the entire inventory in a 2" ID x 20 ft., transfer hose.		195	90	40
6a	Release of the entire inventory in a 2.5 inch dia. transfer hose x 16 ft. length		215	98	45
6b	Release of the entire inventory in a 3-inch dia. transfer hose x 12 ft. length		230	100	46
7	Transport hose blow down: Hose size 2" ID, 20 ft length release for 3min., from a Transport after the tank is filled.		25	30	<5
7a	Transport hose blow down: Hose size 2.5" ID, 16 ft length release for 3min., from a Transport after the tank is filled.		25	29	<5
7b	Transport hose blow down: Hose size 3" ID, 16 ft length release for 3min., from a Transport after the tank is filled.		31	36	<5

** Results from models described in Appendix B. The results are rounded to the nearest 5 feet.

Form 7.1
Types of Occupancies[1] Near or Surrounding the LP-Gas Facility

Type of Occupancies	Model # from Table 7.1	Hazard Distance[2] (feet)	Is Occupancy located within the hazard distance from the Facility?	
			Yes	No
Assembly Occupancies (Places of worship, Libraries, Theaters and Auditoriums, Food or Drink Bars, Sports Stadiums, Amusement Parks, Transportation Centers, etc. with 50 or more people).	1A	250		√
Institutional Occupancies (Elderly Persons Home or Nursing Home, Hospitals, Alcohol & Drug Rehabilitation Centers, Prisons)	1A	250		√
Educational Occupancies (Elementary Schools, Day Care facilities, etc).	1A	250		√

NOTES: (1) Different types of occupancies are defined in NFPA 5000

(2) Table 7.1 provides a number of scenarios that can result in propane release, and the resulting area exposed for different ignition mechanisms. Determine the scenarios that are applicable to the facility, for the quantities that can be released, and enter the greatest value from Table 7.1. Use the hose diameters and length that will be used at the facility if they differ from the ones in Table 7.1 and recalculate the hazard distances using a spreadsheet method that is available at npga.org. Some scenarios may not be applicable to an installation because of other mitigation measures implemented, such as a hose management procedure to minimize the possibility of hose failure

Form 7.2
Exposure to LP-Gas Facility from External Hazards

A	B	C	D
Item #	**Type of Neighboring Operation**	**Hazard exists to the LP-Gas Facility**	
		YES	**NO**
1	Petroleum and other hazardous material storage, wholesale dispensing, etc.	NA	NA
2	Metal cutting, welding, and metal fabrication	NA	NA
3	Industrial Manufacturing that can pose external hazards	NA	NA
4	Ports, rail yards and trans-shipment terminals handling flammable and explosive materials.	NA	NA
5	Other operations that may pose hazards (gasoline and other hazardous material dispensing stations, fertilizer storage, etc).	NA	NA

NOTE: If a particular activity indicated in column B does not exist, fill both "Yes" and "No" columns with "NA."

Form 8.1
Data on the Responding Fire Department

A	B		C
Item #	**Data Item**		**Data Entry**
1	Name of the Fire Department (FD).		County F.D.
2A	Name of the person in the FD assisting with the data acquisition.		Don Hayes
2B	Position of the person in the FD assisting with the data acquisition.		Captain
3A	Date on which FD data was collected.		3/5/09
3B	Name of the person collecting the data.		John Egan
4	Number of firefighters on duty at any time.		Volunteer Only
5	Average number of firefighters available for response.		5
6A	Number of firefighters qualified to	"Firefighter I" level.	5
6B		"Firefighter II" level.	0
7A	Number of firefighters who would:	Respond on the first alarm to the facility.	5
7B		Respond on the first alarm and who are qualified to the operations level requirements of NFPA 472 or similar local requirements	2
7C		Respond on the first alarm with specific knowledge and training on the properties of LP-Gas and LP-Gas fires.	2
8A	Number of fire apparatus that have the capability to deploy a 125 gpm hose line supplied by onboard water for at least 4 minutes, and, which:	Are in service in the department.	1
8B		Would respond on a first alarm.	1

Form 8.2

Response Time data for the Fire Departments

A	B	C	D	E
Company or Department	**Time in Minutes for**			
	Alarm Receipt & Handling	**Turnout**	**Travel**	**Total Time**
Springfield	60 s	4 min.	8 min.	13 min.

Note: Number in Column E = Sum of numbers from Columns B through D.

Form 8.3

Water Flow Rate and Total Water Volume Required to Cool Containers Exposed to a Fire

A	B	C	D	E	F	G	H
Item #	**ASME Container Size (gallons)**	**Total Surface Area of each Container[1] (ft^2)**	**Surface Area of each container to be Cooled (ft^2)**	**Water flow rate required per container (gpm)**	**Number of containers of the size indicated‡**	**Total Water flow rate required (gpm)**	**Total volume of water required for 10 min (gal)**
1	500	86	43	10.8			
	1,000	172	86	21.5			
	2,000	290	145	36.3	4	109	
	4,000	374	187	46.8			
	6,500	570	285	71.3			
	9,200	790	395	98.8			
	12,000	990	495	123.8			
	18,000	1,160	580	145.0			
	30,000	1,610	805	201.3			
	45,000	2,366	1,183	295.8			
	60,000	3,090	1,545	386.3			
	90,000	4,600	2,300	575.0			
	Other Size						
2a	Calculated water flow rate for container protection					109	
2b	Water flow rate rounded up to nearest multiple of 125					125	
3	Water for firefighter protection, if required					250	
4	Total water flow rate and volume					375	3,750

Note: Column D = (1/2) x Column C Column E = 0.25 (gpm/ft^2) x Column D ;
Column G = Column F x Column E Column H = 10 x Column G
Line 2a, Column G and Column H are the sum of numbers in each row above line 2 of each column.
Line 4, Column G and Column H are the sum of numbers in rows 2b and 3.

‡ Consider only 3 containers for water supply evaluations even if the number of containers in a group is more than 3. See Section 8.2.

1 ASME container approximate dimensions

Form 8.4

Evaluation of Water Availability in or Near the LP-Gas Facility

A	B	C	D		
Item #	**Water from…**	**Available?**	**Quantitative information**		
1	Public supply or from another piped-in supply through one or more fire hydrants in or near the facility	☐ Yes ☒ No	Hydrant data	Distance from Container(s) on which water will be applied (feet)	Available water flow rate from all hydrants[1] (gpm)
			Hydrant 1		
			Hydrant 2		
			Hydrant 3		
2	A nearby static water source (stream, pond, lake, etc).	☐ Yes ☒ No	Distance to water source = _____ Feet Time to set up relay = _____ min. Rate of delivery = _____ gpm		
3	Only through mobile water tanker shuttle.	☒ Yes ☐ No Pond 5 miles away	Time to set up shuttle = _____ min. Sustainable flow rate = _____ gpm		

(1) Obtain the available flow rate from the local municipal water authority or the entity that supplies water to the hydrant or conduct a test to determine total available flow rate.

10.2 Illustrative Example # 2

LP-Gas Facility:

An 18,000 gallon container is located at a customer facility. There is a transport unloading station remotely located from the container. The customer (a shipping container warehouse) is supplied with vapor from a vaporizer.

Other Facility Information:

1) The container is located within the customer facility property line.
2) The LP container is 75 ft. from the warehouse/shipping facility wall and also 75 ft. from the vaporizers located to the East of the container.
3) The customer property line nearest to the LP-Gas container is 75 ft. away, along the NE direction.
4) The containers are filled from a truck transport. The transport unloading station is 110 ft. SW of the container. This LP-Gas unloading station is 60 ft. from the western wall of the container shipping facility.
5) There is a 2" dia. liquid line leading from the transport unloading riser and a 1¼ in. dia. Liquid line feeding a motor fuel dispenser, which is located between the warehouse/shipping facility and the storage container.
6) There is a single entrance gate to the customer property on the west side of the property to the main warehouse.
7) The warehouse is in an industrial area.
8) The liquid withdrawal line is manifolded to feed both the motor fuel dispenser and a vaporizer that provides fuel to the warehouse facility.
9) The container does not have any special protection. Also, there are no redundant & fail-safe systems provided for the LP-Gas plant.
10) There is no sensitive property or populations (educational, assembly or institutional) within the hazard distance (250 ft.) from the containers.
11) A single water hydrant is located within the warehouse property line. This hydrant is supplied from the town/municipal water supply system. Water is available from a pond 5 miles from the facility.
12) The nearest fire department is a distance of 3 miles and is manned with career firefighters at all times. The next nearest fire department is 7.5 miles away and also is manned with career fire fighters.

Figure 10.2 shows a schematic plan view of the LP-Gas facility used in Example 2.

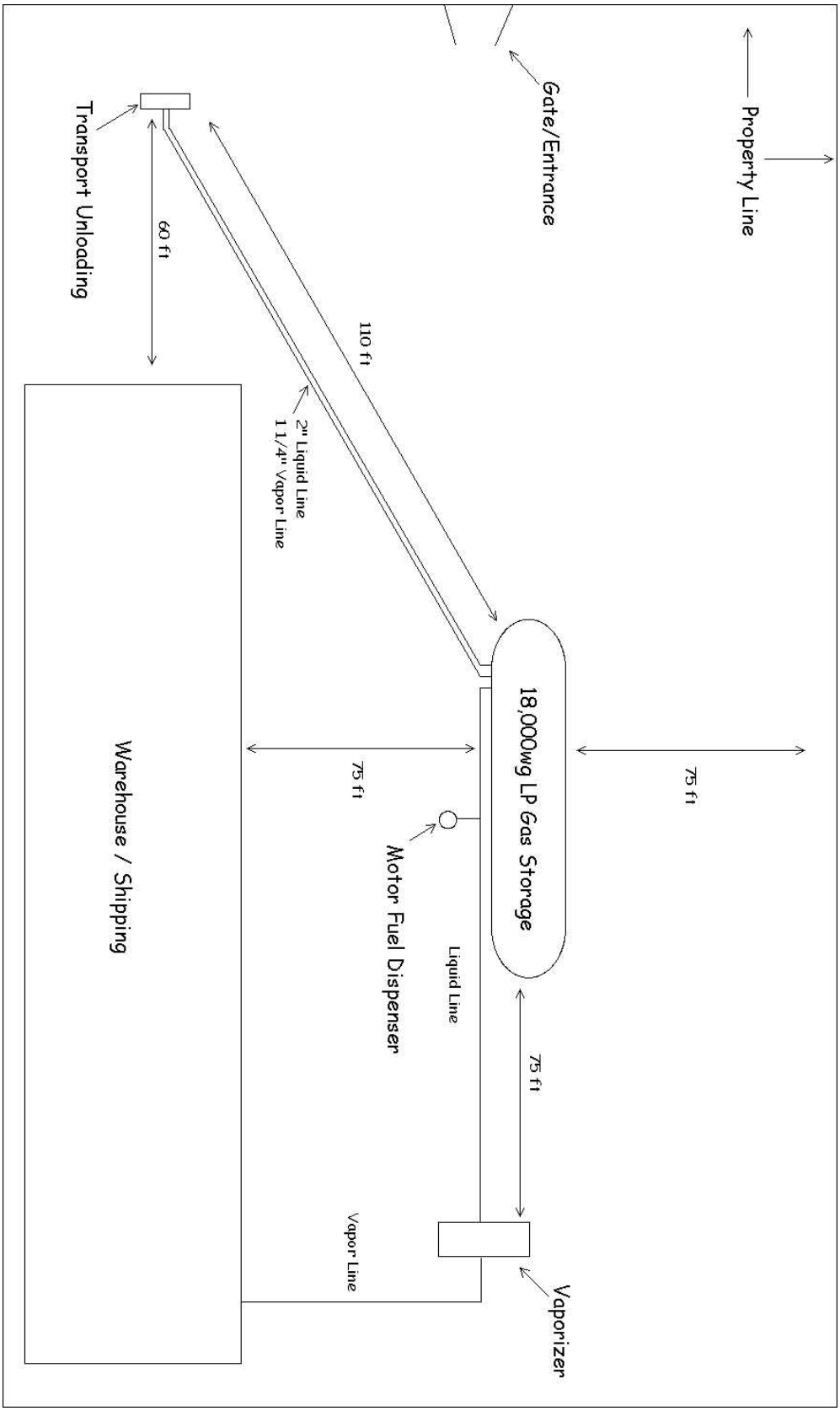

Figure 10.2 Schematic plan view of a LP-Gas facility used in Example 2

Form 4.1
Initial Data on the LP-Gas Facility

A	B	C
Item #	**Information Item**	**Data**
1	Name of the LP-Gas Plant Owner or Operator	**XYZ Propane**
2	Contact Name:	
3	Contact Telephone & Fax Numbers	
4	Contact Email Address	
5	Mailing Address	Street 1:
		Street 2:
		City, State, Zip: Lynchburg, VA

Form 4.2
Facility Storage Capacity [1,2,3]

A	B	C	D
Item #	**Individual Container Water Capacity (w.c.) (gallons)**	**Number of containers**	**Total Water Capacity (w.c.) of each container size (gallons)**
1	500		
	1,000		
	2,000		
	4,000		
	10,000		
	18,000	1	18000
	30,000		
	60,000		
	Other:		
	Other:		
	Other:		
	Other:		
2	**Aggregate Water Capacity[4]**	1	18,000

Notes:
(1) Column D = Column B x Column C.
(2) Parked bobtails, transports and tank cars should not be considered for aggregate capacity calculations.
(3) Do not consider containers that are not connected for use.
(4) For the purpose of this manual, "Aggregate Water Capacity" means any group of single ASME storage containers separated from each other by distances less than those stated in the aboveground containers column of Table 6.3.1.

Form 4.3
Additional Information on the LP-Gas Facility

☑ Existing Facility; Built to NFPA 58 Edition __**1995**___ ☐ Proposed Facility

a) Name of the Plant (if applicable) _____XYZ Propane _____

b) Type of LP-Gas Plant: ☐ Commercial ☑ Industrial ☐ Bulk Plant

c) Facility is located in ☐ Rural Area, ☑ Suburban Area, ☐ City Commercial Zone
☐ City Industrial Zone

d) Facility neighbors[§]: ☐ Agri. fields ☐ Commercial Bldgs ☐ Flammable Liquids Storage
(Check all that apply) ☑ Industrial Activity (metal fabrication, cutting and welding, etc)
☐ Manufacturing ☐ Others (explain) _____

e) Geographic Location of Plant:
Address: _____
_____

f) Landmarks, if any: _____
_____

g) LP-Gas liquid supply by: ☐ Bobtail ☑ Truck Transport ☐ Rail Tank Car
(Check all that apply) ☐ Pipeline

h) LP-Gas Distribution by: ☐ Bobtail ☐ Truck Transport ☑ Vapor Piping
Plant (Check all that apply) ☐ Liquid Piping ☑ Dispensing or Vehicle fueling

i) Number of vehicle entrances: ☑ One ☐ Two ☐ More than two

j) Type of access roads to the plant: ☐ Rural ☑ City or Town ☐ Highway
(One check per line) Entrance 1 ☐ Dirt road ☐ Gravel road ☑ Paved
(One check per line) Entrance 2 ☐ Dirt road ☐ Gravel road ☐ Paved

k) Staff presence ☐ Not staffed ☑ Only during transfer operations
☐ Staffed always (24/7) ☐ Only during business hours
☐ Other (Explain) _____

l) Location and distances to Assembly, Educational or Institutional Occupancies surrounding the facility, if any, within 250 ft from the facility boundary in the direction of the assets.
___Institutional or other occupancies do not lie within 250 ft., of the facility._____
_____

m) Is an overview plot plan of the facility attached? ☑ Yes ☐ No

§ All properties either abutting the LP-Gas facility or within 250 feet of the container or transfer point nearest to facility boundary.

Form 5.4
Compliance with Code Requirements for Appurtenances on Containers Having a Water Capacity Greater Than 4,000 Gallons Used in Bulk Plants and Industrial Plants

A	B	C	D		E	F	G
Container #	**LP-Gas inlet to and outlet from the container****		**Enter Configur-ation Number**		**Total Number of Product Control Appurtenances**		**NFPA 58 Section Reference (2008 edition)**
					Required by NFPA 58 (applicable edition)	**Installed on the container**	
1	**Vapor**	Inlet	5-2				See §5.7.4.2 and Table 5.7.4.2
		Outlet	5-3	5-3-2	3	3	
	Liquid	Inlet	5-6	5-6A-2	4	3	
		Outlet	5-7	5-7B-2	4	4	

** If the container does not provide an opening for the specific function listed, enter 0 (zero) in columns E and F corresponding to that row.

Form 5.5
Requirements for Transfer Lines of 1½-inch Diameter or Larger, Liquid-into-Containers

A	B	C	D	E	F
Item #	**Appurtenance (Either No. 1 or No. 2)****	**Appurtenance Provided with the Feature**	**Installed in the facility?**		**NFPA 58 Section Reference (2008 edition)**
			Yes	**No**	
1	Emergency Shutoff Valve (ESV) (Ref § 6.12)	Installed within 20 ft. of lineal pipe from the nearest end of the hose or swivel-type connections.	√		6.12.2
		Automatic shutoff through thermal (fire) actuation with melting point of thermal element < 250 ^{o}F	√		6.12.6
		Temperature sensitive element (fusible link) installed within 5 ft from the nearest end of the hose or swivel type piping connected to liquid transfer line.	√		6.12.6
		Manual shutoff feature provided at ESV installed location.	√		6.12.10 (1)
		Manual shutoff device provided at a remote location, not less than 25 ft., and not more than 100 ft. from the ESV.	√		6.12.10 (2)
		An ESV is installed on each leg of a multi leg piping each of which is connected to a hose or a swivel type connection on one side and to a header of size 1½ inch in diameter or larger on the other side.	√		6.12.5 6.18.2.6 (1)

		Breakaway protection is provided such that in any pull-away break will occur on the hose or swivel-type connection side while retaining intact the valves and piping on the plant side.	√		6.12.8
2	Back flow Check Valve (BCK)**	Installed downstream of the hose or swivel-type connection		N.A.	6.12.8
		BCK is designed for this specific application.		N.A.	6.12.4
		A BCK is installed on each leg of a multi leg piping each of which is connected to a hose or a swivel type connection on one side and to a header of 1½ inch in diameter or larger on the other side.		N.A.	6.12.5
		Breakaway protection is provided such that in any pull-away break will occur on the hose or swivel-type connection side while retaining intact the valves and piping on the plant side.		N.A.	6.12.8

** In lieu of an emergency shutoff valve, the backflow check valve (BCK) is only permitted when flow is only into the container and shall have a metal-to-metal seat or a primary resilient seat with metal backup, not hinged with a combustible material (6.12.3, 6.12.4).

Form 5.6
Requirements for Transfer Lines of 1½-inch Diameter or Larger, Liquid Withdrawal From Containers

A	B	C	D	E	F
Item #	**Appurtenance**	**Appurtenance Provided with the Feature**	**Installed in the facility?**		**NFPA 58 Section Reference (2008 Edition)**
			Yes	**No**	
1	Emergency Shutoff Valve (ESV) (Ref § 6.12.1)	Installed within 20 ft. of lineal pipe from the nearest end of the hose or swivel-type connections.	√		6.12.2
		Automatic shutoff through thermal (fire) actuation with melting point of thermal element < 250 °F.	√		6.12.6
		Temperature sensitive element installed within 5 ft from the nearest end of the hose or swivel type piping connected to liquid transfer line.	√		6.12.6
		Manual shutoff feature provided at ESV installed location.	√		6.12.10 (1)
		Manual shutoff device provided at a remote location, not less than 25 ft., and not more than 100 ft. from the ESV.	√		6.12.10 (2)
		An ESV is installed on each leg of a multi leg piping each of which is connected to a hose or a swivel type connection on one side and to a header of 1½ inch in diameter or larger on the other side.	√		6.12.5 6.18.2.6 (1)
		Breakaway protection is provided such that in any pull-away break will occur on the hose or swivel-type connection side while retaining intact the valves and piping on the plant side.	√		6.12.8
		Number of ESV's in liquid withdrawal service	1		

Note: If more than one ESV is installed in the facility, use one Form 5.6 for each ESV.

Form 5.7
Requirements for Vapor Transfer Lines 1¼-inch Diameter or Larger

A	B	C	D	E	F
Item #	Appurtenance	Appurtenance Provided with the Feature	Installed in the facility?		NFPA 58 Section Reference (2008 edition)
			Yes	No	
1	Emergency Shutoff Valve (ESV) (Ref § 6.12.1)	Installed within 20 ft. of lineal pipe from the nearest end of the hose or swivel-type connections.	√		6.12.2
		Automatic shutoff through thermal (fire) actuation with melting point of thermal element < 250 ^{o}F	√		6.12.6
		Temperature sensitive element installed within 5 ft from the nearest end of the hose or swivel type piping connected to liquid transfer line.	√		6.12.6
		Manual shutoff feature provided at ESV installed location.	√		6.12.10 (1)
		Manual shutoff device provided at a remote location, not less than 25 ft., and not more than 100 ft. from the ESV.	√		6.12.10 (2)
		An ESV is installed on each leg of a multi leg piping each of which is connected to a hose or a swivel type connection on one side and to a header of 1-1/4 inch in diameter or larger on the other side.		N.A.	6.12.5 6.18.2.6 (1)
		Breakaway protection is provided such that in any pull-away break will occur on the hose or swivel-type connection side while retaining intact the valves and piping on the plant side.	√		6.12.8
2	Back flow Check Valve (BCK)**	Installed downstream of the hose or swivel-type connection	N.A.	N.A.	6.12.8
		BCK is designed for this specific application.	N.A.	N.A.	6.12.3 and 6.12.4
		A BCK is installed on each leg of a multi leg piping each of which is connected to a hose or a swivel type connection on one side and to a header of 1-1/4 inch in diameter or larger on the other side.	N.A.	N.A.	6.12.5
		Breakaway protection is provided such that in any pull-away break will occur on the hose or swivel-type connection side while retaining intact the valves and piping on the plant side.	N.A.	N.A.	6.12.8

** In lieu of an emergency shutoff valve, the backflow check valve (BCK) is only permitted when flow is only into the container and it shall have a metal-to-metal seat or a primary resilient seat with metal backup, not hinged with a combustible material (6.12.3, 6.12.4).

Form 6.1
Evaluation of Physical Protection and Other Measures

A	B	C	D	E	F
#	Item	Features	Installed in the facility?		NFPA 58 Section Reference (2008 Edition)
			Yes	No	

1	Lighting‡	Provide lighting for nighttime operations to illuminate storage containers, container being loaded, control valves, and other equipment	√		6.18.5
2	Vehicle impact protection	Protection against vehicular (traffic) impacts on containers, transfer piping and other appurtenances is designed and provided commensurate with the size of vehicles and type of traffic in the facility. (Example protection systems include but not limited to (1) Guard rails, (2) Steel bollards or crash posts, (3) Raised sidewalks.	√		6.9.3.10 and 6.19.3.2
3	Protection against corrosion	Provide protection against corrosion where piping is in contact with supports or corrosion causing substances.		√	6.9.3.11
Complete only 4A or 4B					
4A	Perimeter Fence	Is an industrial type or chain link fence of at least 6 ft high or equivalent protection provided to enclose (all around) container appurtenances, pumping equipment, loading and unloading and container filling facilities?	√		6.18.4.2
		Are at least two means of emergency accesses (gates) from the enclosure provided? **NOTE: Write "N.A." (not applicable) if** (i) The area enclosed is less than 100 ft^2, or (ii) The point of transfer is within 3 ft of the gate, or containers are not filled within the enclosure		√	6.18.4.2 (A)
		Is a clearance of at least 3 feet all around to allow emergency access to the required means of egress been provided?	√		6.18.4.2 (B)
	Guard Service	If a guard service is provided, does this service cover the LP-Gas plant and are the guard personnel provided with appropriate LP-Gas related training, per section 4.4 of NFPA 58?	NA		6.18.4.3
4B	Lock-in-Place devices	Are Lock-in-Place devices provided to prevent unauthorized use or operation of any container appurtenance, system valves, or equipment in lieu of the fence requirements above?	NA		6.18.4.2 (C)

Note: Fill only items 1, 2, 3, and 4A or 4B. Indicate with "NA" when not filling the "Yes" or "No" column.

‡ Indicate with "NA" if the facility is not operated at night.

Form 6.2
Assessment of Sources of Ignition and Adjacent Combustible Materials

A	B	C	D	E
#	**Sources of Ignition and Requirements Pertaining to Adjacent Combustible Materials**	**Is the Facility compliant?**		**NFPA 58 Section Reference (2008 Edition)**
		Yes	**No**	
1	Are combustible materials, weeds and tall grass not closer than 10 ft. from each container?	√		6.4.5.2
2	Is a distance at least 20 ft. provided between containers and tanks containing flammable liquids with flash point less than 200 ^{o}F (ex., gasoline, diesel)?	√		6.4.5.5
3	Are electrical equipment and wiring installed per Code requirements?	√		6.22.2
4	Is open flame equipment located and used according to Code?	√		6.22.3.1
5	Are ignition control procedures and requirements during liquid transfer operations complied with.?	√		7.2.3.2
6	Is an approved, portable, dry chemical fire extinguisher of minimum capacity 18 Lbs. and having a B:C rating provided in the facility?	√		6.25.4.2
7	Is an approved, portable, dry chemical fire extinguisher of minimum capacity 18 Lbs. and having a B:C rating provided on each truck or trailer used to transport portable containers?	√		9.4.7
8	Is the prohibition on smoking within the facility premises strictly enforced?	√		7.2.3.2 (B) & 9.4.10

Note: Insert "NA" in both "Yes" and "No" columns of any items that are not applicable.

Form 6.3

Separation Distances from Containers to Buildings, Property Lines that can be Built upon, Inter-container Distances, and Aboveground Flammable or Combustible Storage Tanks

A	B	C	D	E	F	G
#	**Container Size Range in gal (W.C.)**	**Separation between a property line, important building or other property and the <u>nearest</u> container which is**	**Minimum Distance (ft)**	**Is the Facility compliant?**		**NFPA 58 Section Reference (2008 Edition)**
				Yes	**No**	
1	501 through 2,000	Above Ground	25	NA	NA	6.3.1 and Table 6.3.1
		Underground or Mounded	10	NA	NA	
		Between containers	3	NA	NA	
2	2,001 through 30,000	Above Ground	50	√		
		Underground or Mounded	50	NA	NA	
		Between containers	5	NA	NA	
3	30,001 through 70,000	Above Ground	75	NA	NA	
		Underground or Mounded	50	NA	NA	
		Between containers	¼ sum of diameters of adjacent containers	NA	NA	
4	70,001 through 90,000	Above Ground	100	NA	NA	
		Underground or Mounded	50	NA	NA	
		Between containers	¼ sum of diameters of adjacent containers	NA	NA	
5	All sizes greater than 125 gal	Separation distance between a LP-Gas container and an above ground storage tank containing flammable or combustible liquids of flash points below 200 ^{o}F.	20	√		6.4.5.4 and 6.4.5.5

Note: If any of the container sizes indicated in the above form are not present in the facility, enter "NA" in both Yes and No columns

Form 6.4
Separation Distances between Points of Transfer and other Exposures

A	B		C	D	E	F	G
#	Type of Exposure within or outside the facility boundary		Check if exposure is present	Minimum Distance (ft)	Is the Facility compliant?		NFPA 58 Section Reference (2008 Edition)
					Yes	No	
1	Buildings, mobile homes, recreational vehicles, and modular homes with fire-resistive walls			10	NA	NA	Section 6.5.3 Table 6.5.3
2	Buildings with other than fire resistive walls			25	NA	NA	
3	Building wall openings or pits at or below the level of the point of transfer			25	NA	NA	
4	Line of adjoining property that can be built upon			25	NA	NA	
5	Outdoor places of public assembly, including school yards, athletic fields, and playgrounds			50	NA	NA	
6	Public ways, including public streets, highways, thoroughfares, and sidewalks	From points of transfer in LP-Gas dispensing stations and at vehicle fuel dispensers.		√			
		From other points of transfer		√			
7	Driveways			5	NA	NA	
8	Mainline railroad track centerlines			25	NA	NA	
9	Containers other than those being filled			10	NA	NA	
10	Flammable and Class II combustible liquid dispensers and aboveground and underground containers			20	NA	NA	
11	Flammable and Class II combustible liquid dispensers and the fill connections of LPG containers			10			
12	LP-Gas dispensing device located close to a Class I liquid dispensing device.			10	NA	NA	6.24.4.3

NOTE: Place a checkmark in column C against an exposure that is present in or around the facility. Fill columns E or F for only those rows for which there is a checkmark in column C..

Form 6.7
Protection Against Vehicular Impact

#	System Protected	Is physical protection provided?		Type of physical protection installed
		Yes	No	
1	Storage containers		√	
2	Transfer stations	√		Steel posts
3	Entryway into plant		√	

Table 7.1
Distances to Various Types of Propane Hazards Under Different Release Models**

Model #	Details of the Propane Release Model Releases from or due to		Vapor Dispersion Distance to LFL (ft)	Explosion Hazard Distance (ft)	Fire Ball Radiation Distance (ft)
1A	Bobtail hose failure. Release of the entire inventory in the hose, quickly.	1" ID x 150 ft hose length	250	110	50
1B		1" ID x 120 ft hose length	230	103	45
1C		1" ID x 75 ft hose length	190	90	40
2a	Release of the inventory in a transfer piping 1" x 30 ft + @ 20 gpm for 10 min., due to failed excess flow valve.		135	120	25
2b	Release of the inventory in a transfer piping 2" x 30 ft + @80 gpm for 10 mins.		230	252	48
2c	Release of the inventory in a transfer piping 2" x 80 ft. @ 70 gpm for 10 mins.		328	235	74
2d	Release of the inventory in a transfer piping 2.5" x 30 ft @80 gpm for 10 mins.		269	252	59
2e	Release of the inventory in a transfer piping 3" x 30 ft + @100 gpm for 10 mins.		312	287	69
2f	Release of the inventory in a transfer piping 3" x 18 ft + @100 gpm for 10 mins.		256	284	55
3	Release from the container pressure relief valve		No ignitable vapor concentration at ground level		
4	Release from a 1" ID x 150 ft transfer piping to a vaporizer and reduced flow from a partially open excess flow valve @ 20 gpm for 10 min.		250	120	50
5	Leak from a corrosion hole in a transfer pipe at a back pressure of 130 psig (corresponding to 80 ^{o}F) for 60 min. Hole size is ¼" ID.		110	120	5
6	Release of the entire inventory in a 2" ID x 20 ft., transfer hose.		195	90	40
6a	Release of the entire inventory in a 2.5 inch dia. transfer hose x 16 ft. length		215	98	45
6b	Release of the entire inventory in a 3-inch dia. transfer hose x 12 ft. length		230	100	46
7	Transport hose blow down: Hose size 2" ID, 20 ft length release for 3min., from a Transport after the tank is filled.		25	30	<5
7a	Transport hose blow down: Hose size 2.5" ID, 16 ft length release for 3min., from a Transport after the tank is filled.		25	29	<5
7b	Transport hose blow down: Hose size 3" ID, 16 ft length release for 3min., from a Transport after the tank is filled.		31	36	<5

** Results from models described in Appendix B. The results are rounded to the nearest 5 feet.

Form 7.1
Types of Occupancies[1] Near or Surrounding the LP-Gas Facility

Type of Occupancies	Model # from Table 7.1	Hazard Distance[2] (feet)	Is Occupancy located within the hazard distance from the Facility?	
			Yes	No
Assembly Occupancies (Places of worship, Libraries, Theaters and Auditoriums, Food or Drink Bars, Sports Stadiums, Amusement Parks, Transportation Centers, etc. with 50 or more people).	6B	230		√
Institutional Occupancies (Elderly Persons Home or Nursing Home, Hospitals, Alcohol & Drug Rehabilitation Centers, Prisons)	6B	230		√
Educational Occupancies (Elementary Schools, Day Care facilities, etc).	6B	230		√

NOTES: (1) Different types of occupancies are defined in NFPA 5000

(2) Table 7.1 provides a number of scenarios that can result in propane release, and the resulting area exposed for different ignition mechanisms. Determine the scenarios that are applicable to the facility, for the quantities that can be released, and enter the greatest value from Table 7.1. Use the hose diameters and length that will be used at the facility if they differ from the ones in Table 7.1 and recalculate the hazard distances using a spreadsheet method that is available at npga.org. Some scenarios may not be applicable to an installation because of other mitigation measures implemented, such as a hose management procedure to minimize the possibility of hose failure.

Form 7.2
Exposure to LP-Gas Facility from External Hazards

A	B	C	D
Item #	**Type of Neighboring Operation**	**Hazard exists to the LP-Gas Facility**	
		YES	**NO**
1	Petroleum and other hazardous material storage, wholesale dispensing, etc.		√
2	Metal cutting, welding, and metal fabrication		√
3	Industrial Manufacturing that can pose external hazards		√
4	Ports, rail yards and trans-shipment terminals handling flammable and explosive materials.		√
5	Other operations that may pose hazards (gasoline and other hazardous material dispensing stations, fertilizer storage, etc).		√

NOTE: If a particular activity indicated in column B does not exist, fill both "Yes" and "No" columns with "NA."

Form 8.1
Data on the Responding Fire Department

A	B		C
Item #	**Data Item**		**Data Entry**
1	Name of the Fire Department (FD).		Suburban
2A	Name of the person in the FD assisting with the data acquisition.		Don Miller
2B	Position of the person in the FD assisting with the data acquisition.		Lieutenant
3A	Date on which FD data was collected.		10/3/08
3B	Name of the person collecting the data.		Bill Holmes
4	Number of firefighters on duty at any time.		10
5	Average number of firefighters available for response.		7
6A	Number of firefighters qualified to	"Firefighter I" level.	3
6B		"Firefighter II" level.	4
7A	Number of firefighters who would:	Respond on the first alarm to the facility.	5
7B		Respond on the first alarm and who are qualified to the operations level requirements of NFPA 472 or similar local requirements	3
7C		Respond on the first alarm with specific knowledge and training on the properties of LP-Gas and LP-Gas fires.	5
8A	Number of fire apparatus that have the capability to deploy a 125 gpm hose line supplied by onboard water for at least 4 minutes, and, which:	Are in service in the department.	2
8B		Would respond on a first alarm.	1

Form 8.2

Response Time Data for the Fire Departments

A	B	C	D	E
Company or Department	**Time in Minutes for**			
	Alarm Receipt & Handling	**Turnout**	**Travel**	**Total Time**
Suburban	60 s	3 min.	3 min.	7 min.

Note: Number in Column E = Sum of numbers from Columns B through D.

Form 8.3

Water Flow Rate and Total Water Volume Required to Cool Containers Exposed to a Fire

A	B	C	D	E	F	G	H
Item #	**ASME Container Size (gallons)**	**Total Surface Area of each Container[1] (ft^2)**	**Surface Area of each container to be Cooled (ft^2)**	**Water flow rate required per container (gpm)**	**Number of containers of the size indicated‡**	**Total Water flow rate required (gpm)**	**Total volume of water required for 10 min (gal)**
1	500	86	43	10.8			
	1,000	172	86	21.5			
	2,000	290	145	36.3			
	4,000	374	187	46.8			
	6,500	570	285	71.3			
	9,200	790	395	98.8			
	12,000	990	495	123.8			
	18,000	1,160	580	145.0	1	145	
	30,000	1,610	805	201.3			
	45,000	2,366	1,183	295.8			
	60,000	3,090	1,545	386.3			
	90,000	4,600	2,300	575.0			
	Other Size						
2a	Calculated water flow rate for container protection					145	
2b	Water flow rate rounded up to nearest multiple of 125					125	
3	Water for firefighter protection, if required					250	
4	Total water flow rate and volume					500	5,000

Note: Column D = (1/2) x Column C Column E = 0.25 (gpm/ft^2) x Column D ;
Column G = Column F x Column E Column H = 10 x Column G
Line 2a, Column G and Column H are the sum of numbers in each row above line 2 of each column.
Line 4, Column G and Column H are the sum of numbers in rows 2b and 3.

‡ Consider only 3 containers for water supply evaluations even if the number of containers in a group is more than 3. See Section 8.2.

1 ASME container approximate dimensions

Form 8.4

Evaluation of Water Availability in or Near the LP-Gas Facility

A	B	C	D		
Item #	**Water from…**	**Available?**	**Quantitative information**		
1	Public supply or from another piped-in supply through one or more fire hydrants in or near the facility	**X** Yes ☐ No	Hydrant data	Distance from Container(s) on which water will be applied (feet)	Available water flow rate from all hydrants[1] (gpm)
			Hydrant 1	50	1,000
			Hydrant 2		
			Hydrant 3		
2	A nearby static water source (stream, pond, lake, etc).	**X** Yes ☐ No	Distance to water source = _5_ Miles Time to set up relay = _____ min. Rate of delivery = _____ gpm		
3	Only through mobile water tanker shuttle.	☐ Yes **X** No	Time to set up shuttle = _____ min. Sustainable flow rate = _____ gpm		

(1) Obtain the available flow rate from the local municipal water authority or the entity that supplies water to the hydrant or conduct a test to determine total available flow rate.

10.3 Illustrative Example # 3

LP-Gas Facility:

A single 18,000 gallon container is located in a small urban bulk plant. The plant has a transport unloading station as well as bobtail loading stations. In addition, the plant also houses a cylinder filling operation within its facility boundary.

Other Facility Information:

1) The bulk plant is located in a high-density population area of the town. A nursing home is located within 250 ft. of the facility. There is also a shopping mall entrance within 250 ft. of the container.
2) A cylinder filling dock is 50 ft. from the container.
3) The container is filled from truck transport. The transport unloading station is 50 ft. NW of the container. The liquid line is 2" dia. for the transport unloading riser and 1-1/2 in. diameter for the bobtail loading station. The vapor lines are 1-1/4 in. diameter.
4) There is a single entrance gate to the bulk plant on the west side of the property.
5) The liquid withdrawal line is manifolded to feed multiple bobtail filling stations and the cylinder filling dock.
6) The container does not have any special protection. Also, no redundant & fail-safe system is provided for the LP-Gas plant. The plant is built to conform to NFPA 58, 1992 edition and fulfills all appurtenance requirements of that standard.
7) A single water hydrant is located within the bulk plant. This hydrant is supplied from the town/municipal water supply system.
8) The nearest fire department is at a distance of 3 miles and is staffed with career firefighters at all times.

Figure 10.3 shows a schematic plan view of the LP-Gas facility used in Example 3.

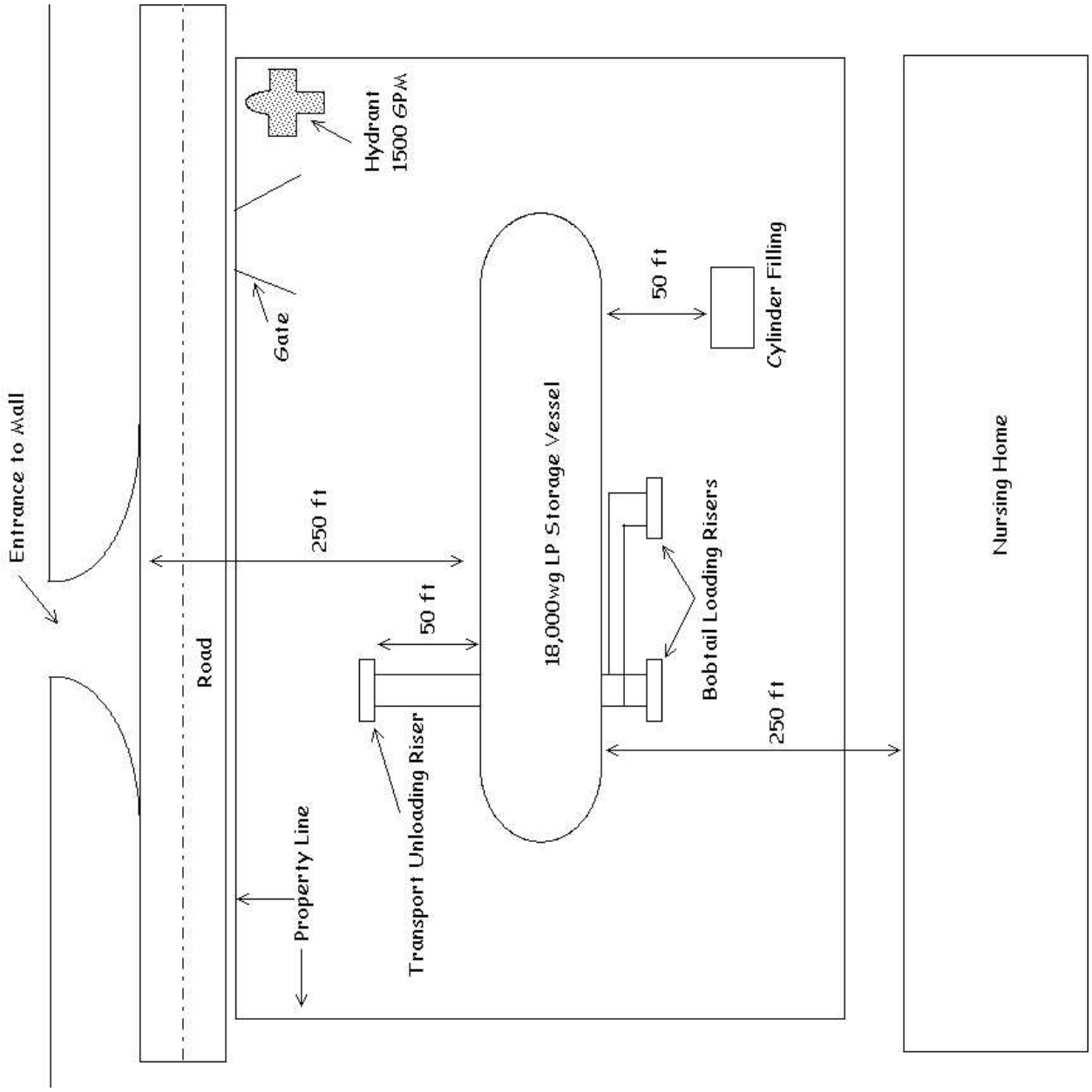

Figure 10.3 Schematic plan view of a LP-Gas facility used in Example 3

Form 4.1
Initial Data on the LP-Gas Facility

A	B	C
Item #	**Information Item**	**Data**
1	Name of the LP-Gas Plant Owner or Operator	**LMN Propane**
2	Contact Name:	
3	Contact Telephone & Fax Numbers	
4	Contact Email Address	
5	Mailing Address	Street 1:
		Street 2:
		City, State, Zip: Westfield, NJ

Form 4.2
Facility Storage Capacity

A	B	C	D
#	**Individual Container Water Capacity (wc) (gallons)**	**Number of containers**	**Total Water Capacity (wc) of each container size (gallons)**
1	500		
	1,000		
	2,000		
	4,000		
	10,000		
	18,000	1	18000
	30,000		
	60,000		
	Other:		
	Other:		
	Other:		
	Other:		
2	**Aggregate Water Capacity**	1	18000

Notes: **(1)** Column D = Column B x Column C.
(2) Parked bobtails, transports and tank cars should not be considered for aggregate capacity calculations.
(3) Do not consider containers that are not connected for use.
(4) For the purpose of this manual, "Aggregate Water Capacity" means any group of single ASME storage containers separated from each other by distances less than those stated in the aboveground containers column of Table 6.3.1.

Form 4.3
Additional Information on the LP-Gas Facility

☑ Existing Facility; Built to NFPA 58 Edition __**1992**___ ☐ Proposed Facility

a) Name of the Plant (if applicable) _____LMN Plant _____

b) Type of LP-Gas Plant: ☐ Commercial ☑ Industrial ☐ Bulk Plant

c) Facility is located in ☐ Rural Area, ☐ Suburban Area, ☑ City Commercial Zone
☐ City Industrial Zone

d) Facility neighbors[§]: ☐ Agri. fields ☐ Commercial Bldgs ☐ Flammable Liquids Storage
(Check all that apply) ☑ Industrial Activity (metal fabrication, cutting and welding, etc)
☐ Manufacturing ☐ Others (explain) _____

e) Geographic Location of Plant:
Address: _____
_____

f) Landmarks, if any: _____
_____

g) LP-Gas liquid supply by: ☐ Bobtail ☑ Truck Transport ☐ Rail Tank Car
(Check all that apply) ☐ Pipeline

h) LP-Gas Distribution by: ☑ Bobtail ☐ Truck Transport ☑ Vapor Piping
Plant (Check all that apply) ☐ Liquid Piping ☑ Dispensing or Vehicle fueling

i) Number of vehicle entrances: ☑ One ☐ Two ☐ More than two

j) Type of access roads to the plant: ☐ Rural ☑ City or Town ☐ Highway
(One check per line) Entrance 1 ☐ Dirt road ☐ Gravel road ☑ Paved
(One check per line) Entrance 2 ☐ Dirt road ☐ Gravel road ☐ Paved

k) Staff presence ☐ Not staffed ☑ Only during transfer operations
☐ Staffed always (24/7) ☐ Only during business hours
☐ Other (Explain) _____

l) Location and distances to Assembly, Educational or Institutional Occupancies surrounding the facility, if any, within 250 ft from the facility boundary in the direction of the assets.
___Institutional or other occupancies do exist within 250 ft., of the facility._____

m) Is an overview plot plan of the facility attached? ☑ Yes ☐ No

§ All properties either abutting the LP-Gas facility or within 250 feet of the container or transfer point nearest to facility boundary.

Form 5.4
Compliance with Code Requirements for Appurtenances on Containers Having a Water Capacity Greater Than 4,000 Gallons Used in Bulk Plants and Industrial Plants

A	B	C	D		E	F	G
Container #	LP-Gas inlet to and outlet from the container**		Enter Configur-ation Number		Total Number of Product Control Appurtenances		NFPA 58 Section Reference (2008 edition)
					Required by NFPA 58 (applicable edition)	Installed on the container	
1	Vapor	Inlet	5-2	5-2-1	3	3	See §5.7.4.2 and Table 5.7.4.2
		Outlet	5-3	5-3-2	3	3	
	Liquid	Inlet	5-6	5-6A-2	4	4	
		Outlet	5-7	5-7B-2	4	4	

** If the container does not provide an opening for the specific function listed, enter 0 (zero) in columns E and F corresponding to that row

Form 5.5
Requirements for Transfer Lines of 1½-inch Diameter or Larger, Liquid-into-Containers

A	B	C	D	E	F
Item #	Appurtenance (Either No. 1 or No. 2)**	Appurtenance Provided with the Feature	Installed in the facility?		NFPA 58 Section Reference (2008 edition)
			Yes	No	
1	Emergency Shutoff Valve (ESV) (Ref § 6.12)	Installed within 20 ft. of lineal pipe from the nearest end of the hose or swivel-type connections.	N.A.	N.A.	6.12.2
		Automatic shutoff through thermal (fire) actuation with melting point of thermal element < 250 °F	N.A.	N.A.	6.12.6
		Temperature sensitive element (fusible link) installed within 5 ft from the nearest end of the hose or swivel type piping connected to liquid transfer line.	N.A.	N.A.	6.12.6
		Manual shutoff feature provided at ESV installed location.	N.A.	N.A.	6.12.10 (1)
		Manual shutoff device provided at a remote location, not less than 25 ft., and not more than 100 ft. from the ESV.	N.A.	N.A.	6.12.10 (2)
		An ESV is installed on each leg of a multi leg piping each of which is connected to a hose or a swivel type connection on one side and to a header of size 1½ inch in diameter or larger on the other side.	N.A.	N.A.	6.12.5 6.18.2.6 (1)

		Breakaway protection is provided such that in any pull-away break will occur on the hose or swivel-type connection side while retaining intact the valves and piping on the plant side.	N.A.	N.A.	6.12.8
2	Back flow Check Valve (BCK)**	Installed downstream of the hose or swivel-type connection	√		6.12.8
		BCK is designed for this specific application.	√		6.12.4
		A BCK is installed on each leg of a multi leg piping each of which is connected to a hose or a swivel type connection on one side and to a header of 1½ inch in diameter or larger on the other side.	√		6.12.5
		Breakaway protection is provided such that in any pull-away break will occur on the hose or swivel-type connection side while retaining intact the valves and piping on the plant side.	√		6.12.8

** In lieu of an emergency shutoff valve, the backflow check valve (BCK) is only permitted when flow is only into the container and shall have a metal-to-metal seat or a primary resilient seat with metal backup, not hinged with a combustible material (6.12.3, 6.12.4).

Form 5.6
Requirements for Transfer Lines of 1½-inch Diameter or Larger, Liquid Withdrawal From Containers

A	B	C	D	E	F
Item #	**Appurtenance**	**Appurtenance Provided with the Feature**	**Installed in the facility?**		**NFPA 58 Section Reference (2008 Edition)**
			Yes	**No**	
1	Emergency Shutoff Valve (ESV) (Ref § 6.12.1)	Installed within 20 ft. of lineal pipe from the nearest end of the hose or swivel-type connections.	√		6.12.2
		Automatic shutoff through thermal (fire) actuation with melting point of thermal element < 250 °F.	√		6.12.6
		Temperature sensitive element installed within 5 ft from the nearest end of the hose or swivel type piping connected to liquid transfer line.	√		6.12.6
		Manual shutoff feature provided at ESV installed location.	√		6.12.10 (1)
		Manual shutoff device provided at a remote location, not less than 25 ft., and not more than 100 ft. from the ESV.	√		6.12.10 (2)
		An ESV is installed on each leg of a multi leg piping each of which is connected to a hose or a swivel type connection on one side and to a header of 1½ inch in diameter or larger on the other side.	√		6.12.5 6.18.2.6 (1)
		Breakaway protection is provided such that in any pull-away break will occur on the hose or swivel-type connection side while retaining intact the valves and piping on the plant side.	√		6.12.8
		Number of ESV's in liquid withdrawal service	2		

Note: If more than one ESV is installed in the facility, use one Form 5.6 for each ESV.

Form 5.7
Requirements for Vapor Transfer Lines 1¼-inch Diameter or Larger

A	B	C	D	E	F
Item #	**Appurtenance**	**Appurtenance Provided with the Feature**	**Installed in the facility?**		**NFPA 58 Section Reference (2008 edition)**
			Yes	**No**	
1	Emergency Shutoff Valve (ESV) (Ref § 6.12.1)	Installed within 20 ft. of lineal pipe from the nearest end of the hose or swivel-type connections.	√		6.12.2
		Automatic shutoff through thermal (fire) actuation with melting point of thermal element < 250 ^{o}F		√	6.12.6
		Temperature sensitive element installed within 5 ft from the nearest end of the hose or swivel type piping connected to liquid transfer line.		√	6.12.6
		Manual shutoff feature provided at ESV installed location.	√		6.12.10 (1)
		Manual shutoff device provided at a remote location, not less than 25 ft., and not more than 100 ft. from the ESV.	√		6.12.10 (2)
		An ESV is installed on each leg of a multi leg piping each of which is connected to a hose or a swivel type connection on one side and to a header of 1-1/4 inch in diameter or larger on the other side.	N.A.	N.A.	6.12.5 6.18.2.6 (1)
		Breakaway protection is provided such that in any pull-away break will occur on the hose or swivel-type connection side while retaining intact the valves and piping on the plant side.	√		6.12.8
2	Back flow Check Valve (BCK)**	Installed downstream of the hose or swivel-type connection	N.A.	N.A.	6.12.8
		BCK is designed for this specific application.	N.A.	N.A.	6.12.3 and 6.12.4
		A BCK is installed on each leg of a multi leg piping each of which is connected to a hose or a swivel type connection on one side and to a header of 1-1/4 inch in diameter or larger on the other side.	N.A.	N.A.	6.12.5
		Breakaway protection is provided such that in any pull-away break will occur on the hose or swivel-type connection side while retaining intact the valves and piping on the plant side.	N.A.	N.A.	6.12.8

** In lieu of an emergency shutoff valve, the backflow check valve (BCK) is only permitted when flow is only into the container and it shall have a metal-to-metal seat or a primary resilient seat with metal backup, not hinged with a combustible material (6.12.3, 6.12.4).

Form 6.1
Evaluation of Physical Protection and Other Measures

A	B	C	D	E	F
#	Item	Features	Installed in the facility?		NFPA 58 Section Reference (2008 Edition)
			Yes	No	
1	Lighting‡	Provide lighting for nighttime operations to illuminate storage containers, container being loaded, control valves, and other equipment	√		6.18.5
2	Vehicle impact protection	Protection against vehicular (traffic) impacts on containers, transfer piping and other appurtenances is designed and provided commensurate with the size of vehicles and type of traffic in the facility. (Example protection systems include but not limited to (1) Guard rails, (2) Steel bollards or crash posts, (3) Raised sidewalks.	√		6.9.3.10 and 6.19.3.2
3	Protection against corrosion	Provide protection against corrosion where piping is in contact with supports or corrosion causing substances.		√	6.9.3.11
Complete only 4A or 4B					
4A	Perimeter Fence	Is an industrial type or chain link fence of at least 6 ft high or equivalent protection provided to enclose (all around) container appurtenances, pumping equipment, loading and unloading and container filling facilities?	√		6.18.4.2
		Are at least two means of emergency accesses (gates) from the enclosure provided? **NOTE: Write "N.A." (not applicable) if** (i) The area enclosed is less than 100 ft^2, or (ii) The point of transfer is within 3 ft of the gate, or containers are not filled within the enclosure	√		6.18.4.2 (A)
		Is a clearance of at least 3 feet all around to allow emergency access to the required means of egress been provided?	√		6.18.4.2 (B)
	Guard Service	If a guard service is provided, does this service cover the LP-Gas plant and are the guard personnel provided with appropriate LP-Gas related training, per section 4.4 of NFPA 58?	NA		6.18.4.3
4B	Lock-in-Place devices	Are Lock-in-Place devices provided to prevent unauthorized use or operation of any container appurtenance, system valves, or equipment in lieu of the fence requirements above?	NA		6.18.4.2 (C)

Note: Fill only items 1, 2, 3, and 4A or 4B. Indicate with "NA" when not filling the "Yes" or "No" column.
‡ Indicate with "NA" if the facility is not operated at night.

Form 6.2
Assessment of Sources of Ignition and Adjacent Combustible Materials

A	B	C	D	E
#	**Sources of Ignition and Requirements Pertaining to Adjacent Combustible Materials**	**Is the Facility compliant?**		**NFPA 58 Section Reference (2008 Edition)**
		Yes	**No**	
1	Are combustible materials, weeds and tall grass not closer than 10 ft. from each container?	√		6.4.5.2
2	Is a distance at least 20 ft. provided between containers and tanks containing flammable liquids with flash point less than 200 ^{o}F (ex., gasoline, diesel)?	√		6.4.5.5
3	Are electrical equipment and wiring installed per Code requirements?	√		6.22.2
4	Is open flame equipment located and used according to Code?	√		6.22.3.1
5	Are ignition control procedures and requirements during liquid transfer operations complied with.?	√		7.2.3.2
6	Is an approved, portable, dry chemical fire extinguisher of minimum capacity 18 Lbs. and having a B:C rating provided in the facility?	√		6.25.4.2
7	Is an approved, portable, dry chemical fire extinguisher of minimum capacity 18 Lbs. and having a B:C rating provided on each truck or trailer used to transport portable containers?	√		9.4.7
8	Is the prohibition on smoking within the facility premises strictly enforced?	√		7.2.3.2 (B) & 9.4.10

Note: Insert "NA" in both "Yes" and "No" columns of any items that are not applicable.

Form 6.3

Separation Distances from Containers to Buildings, Property Lines that can be Built upon, Inter-container Distances, and Aboveground Flammable or Combustible Storage Tanks

A	B	C	D	E	F	G
#	Container Size Range in gal (W.C.)	Separation between a property line, important building or other property and the <u>nearest</u> container which is	Minimum Distance (ft)	Is the Facility compliant?		NFPA 58 Section Reference (2008 Edition)
				Yes	No	
1	501 through 2,000	Above Ground	25	NA	NA	6.3.1 and Table 6.3.1
		Underground or Mounded	10	NA	NA	
		Between containers	3	NA	NA	
2	2,001 through 30,000	Above Ground	50	√		
		Underground or Mounded	50	NA	NA	
		Between containers	5	NA	NA	
3	30,001 through 70,000	Above Ground	75	NA	NA	
		Underground or Mounded	50	NA	NA	
		Between containers	¼ sum of diameters of adjacent containers	NA	NA	
4	70,001 through 90,000	Above Ground	100	NA	NA	
		Underground or Mounded	50	NA	NA	
		Between containers	¼ sum of diameters of adjacent containers	NA	NA	
5	All sizes greater than 125 gal	Separation distance between a LP-Gas container and an above ground storage tank containing flammable or combustible liquids of flash points below 200 ^{o}F.	20	N.A.	N.A.	6.4.5.4 and 6.4.5.5

Note: If any of the container sizes indicated in the above form are not present in the facility, enter "NA" in both Yes and No columns.

Form 6.4
Separation Distances between Points of Transfer and other Exposures

A	B		C	D	E	F	G
#	Type of Exposure within or outside the facility boundary		Check if exposure is present	Minimum Distance (ft)	Is the Facility compliant?		NFPA 58 Section Reference (2008 Edition)
					Yes	No	
1	Buildings, mobile homes, recreational vehicles, and modular homes with fire-resistive walls			10	NA	NA	Section 6.5.3 Table 6.5.3
2	Buildings with other than fire resistive walls			25	NA	NA	
3	Building wall openings or pits at or below the level of the point of transfer			25	NA	NA	
4	Line of adjoining property that can be built upon			25	NA	NA	
5	Outdoor places of public assembly, including school yards, athletic fields, and playgrounds		√	50		√	
6	Public ways, including public streets, highways, thoroughfares, and sidewalks	From points of transfer in LP-Gas dispensing stations and at vehicle fuel dispensers.	√	√			
		From other points of transfer	√	√			
7	Driveways			5	NA	NA	
8	Mainline railroad track centerlines			25	NA	NA	
9	Containers other than those being filled			10	NA	NA	
10	Flammable and Class II combustible liquid dispensers and aboveground and underground containers			20	NA	NA	
11	Flammable and Class II combustible liquid dispensers and the fill connections of LPG containers			10	NA	NA	
12	LP-Gas dispensing device located close to a Class I liquid dispensing device.			10	NA	NA	6.24.4.3

NOTE: Place a checkmark in column C against an exposure that is present in or around the facility. Fill columns E or F for only those rows for which there is a checkmark in column C

Form 6.5
Special Protection Measures –Passive Systems

A	B	C	D		E
#	Special Protection Option	Question	Is the Facility compliant?		NFPA 58 Section Reference (2008 Edition)
			Yes	No	
1	Container Insulation	Insulation provided on each of the containers?	NA	NA	6.25.5.1
		Insulation material complies with the requirements of section 6.25.5.1of NFPA 58?	NA	NA	6.25.5.1 and 6.25.5.2
2	Mounding of containers	Each container in the facility is mounded?	NA	NA	6.25.5.3
		Mounding complies with each requirement under section 6.6.6.3 of NFPA 58.	NA	NA	6.25.5.3
3	Burying of containers	Each container in the facility is buried?	NA	NA	6.25.5.4
		Buried containers comply with each requirement under section 6.6.6.1 of NFPA 58.	NA	NA	6.6.6.1 & 6.25.5.4

Form 6.7
Protection Against Vehicular Impact

#	System Protected	Is physical protection provided?		Type of physical protection installed
		Yes	No	
1	Storage containers	√		Chain link fence
2	Transfer stations	√		Concrete bollards
3	Entry way into the plant	√		Locked steel gate

Table 7.1
Distances to Various Types of Propane Hazards Under Different Release Models**

Model #	Details of the Propane Release Model Releases from or due to		Vapor Dispersion Distance to LFL (ft)	Explosion Hazard Distance (ft)	Fire Ball Radiation Distance (ft)
1A	Bobtail hose failure. Release of the entire inventory in the hose, quickly.	1" ID x 150 ft hose length	250	110	50
1B		1" ID x 120 ft hose length	230	103	45
1C		1" ID x 75 ft hose length	190	90	40
2a	Release of the inventory in a transfer piping 1" x 30 ft + @ 20 gpm for 10 min., due to failed excess flow valve.		135	120	25
2b	Release of the inventory in a transfer piping 2" x 30 ft + @80 gpm for 10 mins.		230	252	48
2c	Release of the inventory in a transfer piping 2" x 80 ft. @ 70 gpm for 10 mins.		328	235	74
2d	Release of the inventory in a transfer piping 2.5" x 30 ft @80 gpm for 10 mins.		269	252	59
2e	Release of the inventory in a transfer piping 3" x 30 ft + @100 gpm for 10 mins.		312	287	69
2f	Release of the inventory in a transfer piping 3" x 18 ft + @100 gpm for 10 mins.		256	284	55
3	Release from the container pressure relief valve		No ignitable vapor concentration at ground level		
4	Release from a 1" ID x 150 ft transfer piping to a vaporizer and reduced flow from a partially open excess flow valve @ 20 gpm for 10 min.		250	120	50
5	Leak from a corrosion hole in a transfer pipe at a back pressure of 130 psig (corresponding to 80 ^{o}F) for 60 min. Hole size is ¼" ID.		110	120	5
6	Release of the entire inventory in a 2" ID x 20 ft., transfer hose.		195	90	40
6a	Release of the entire inventory in a 2.5 inch dia. transfer hose x 16 ft. length		215	98	45
6b	Release of the entire inventory in a 3-inch dia. transfer hose x 12 ft. length		230	100	46
7	Transport hose blow down: Hose size 2" ID, 20 ft length release for 3min., from a Transport after the tank is filled.		25	30	<5
7a	Transport hose blow down: Hose size 2.5" ID, 16 ft length release for 3min., from a Transport after the tank is filled.		25	29	<5
7b	Transport hose blow down: Hose size 3" ID, 16 ft length release for 3min., from a Transport after the tank is filled.		31	36	<5

** Results from models described in Appendix B. The results are rounded to the nearest 5 feet.

Form 7.1
Types of Occupancies[1] Near or Surrounding the LP-Gas Facility

Type of Occupancies	Model # from Table 7.1	Hazard Distance[2] (feet)	Is Occupancy located within the hazard distance from the Facility?	
			Yes	No
Assembly Occupancies (Places of worship, Libraries, Theaters and Auditoriums, Food or Drink Bars, Sports Stadiums, Amusement Parks, Transportation Centers, etc. with 50 or more people).	6B	230		√
Institutional Occupancies (Elderly Persons Home or Nursing Home, Hospitals, Alcohol & Drug Rehabilitation Centers, Prisons)	6B	230		√
Educational Occupancies (Elementary Schools, Day Care facilities, etc).	6B	230		√

NOTES: (1) Different types of occupancies are defined in NFPA 5000

(2) Table 7.1 provides a number of scenarios that can result in propane release, and the resulting area exposed for different ignition mechanisms. Determine the scenarios that are applicable to the facility, for the quantities that can be released, and enter the greatest value from Table 7.1. Use the hose diameters and length that will be used at the facility if they differ from the ones in Table 7.1 and recalculate the hazard distances using a spreadsheet method that is available at npga.org. Some scenarios may not be applicable to an installation because of other mitigation measures implemented, such as a hose management procedure to minimize the possibility of hose failure

Form 7.2
Exposure to LP-Gas Facility from External Hazards

A	B	C	D
Item #	Type of Neighboring Operation	Hazard exists to the LP-Gas Facility	
		YES	NO
1	Petroleum and other hazardous material storage, wholesale dispensing, etc.		√
2	Metal cutting, welding, and metal fabrication		√
3	Industrial Manufacturing that can pose external hazards		√
4	Ports, rail yards and trans-shipment terminals handling flammable and explosive materials.		√
5	Other operations that may pose hazards (gasoline and other hazardous material dispensing stations, fertilizer storage, etc).		√

NOTE: If a particular activity indicated in column B does not exist, fill both "Yes" and "No" columns with "NA."

Form 8.1
Data on the Responding Fire Department

A	B		C
Item #	**Data Item**		**Data Entry**
1	Name of the Fire Department (FD).		Urban F.D.
2A	Name of the person in the FD assisting with the data acquisition.		Jack
2B	Position of the person in the FD assisting with the data acquisition.		Captain
3A	Date on which FD data was collected.		4/28/07
3B	Name of the person collecting the data.		Bill
4	Number of firefighters on duty at any time.		12
5	Average number of firefighters available for response.		8
6A	Number of firefighters qualified to	"Firefighter I" level.	4
6B		"Firefighter II" level.	8
7A	Number of firefighters who would:	Respond on the first alarm to the facility.	6
7B		Respond on the first alarm and who are qualified to the operations level requirements of NFPA 472 or similar local requirements	4
7C		Respond on the first alarm with specific knowledge and training on the properties of LP-Gas and LP-Gas fires.	6
8A	Number of fire apparatus that have the capability to deploy a 125 gpm hose line supplied by onboard water for at least 4 minutes, and, which:	Are in service in the department.	6
8B		Would respond on a first alarm.	4

Form 8.2
Response Time data for the Fire Departments

A	B	C	D	E
Company or Department	**Time in Minutes for**			
	Alarm Receipt & Handling	**Turnout**	**Travel**	**Total Time**
Urban	60s	2 min.	5	8 min.

Note: Number in Column E = Sum of numbers from Columns B through D.

Form 8.3

Water Flow Rate and Total Water Volume Required to Cool Containers Exposed to a Fire

A	B	C	D	E	F	G	H
Item #	**ASME Container Size (gallons)**	**Total Surface Area of each Container[1] (ft^2)**	**Surface Area of each container to be Cooled (ft^2)**	**Water flow rate required per container (gpm)**	**Number of containers of the size indicated‡**	**Total Water flow rate required (gpm)**	**Total volume of water required for 10 min (gal)**
1	500	86	43	10.8			
	1,000	172	86	21.5			
	2,000	290	145	36.3			
	4,000	374	187	46.8			
	6,500	570	285	71.3			
	9,200	790	395	98.8			
	12,000	990	495	123.8			
	18,000	1,160	580	145.0	1	145	
	30,000	1,610	805	201.3			
	45,000	2,366	1,183	295.8			
	60,000	3,090	1,545	386.3			
	90,000	4,600	2,300	575.0			
	Other Size						
2a	Calculated water flow rate for container protection					145	
2b	Water flow rate rounded up to nearest multiple of 125					250	
3	Water for firefighter protection, if required					250	
4	Total water flow rate and volume					500	5,000

Note: Column D = (1/2) x Column C Column E = 0.25 (gpm/ft^2) x Column D ;
Column G = Column F x Column E Column H = 10 x Column G
Line 2a, Column G and Column H are the sum of numbers in each row above line 2 of each column.
Line 4, Column G and Column H are the sum of numbers in rows 2b and 3.

‡ Consider only 3 containers for water supply evaluations even if the number of containers in a group is more than 3. See Section 8.2.

1 ASME container approximate dimensions

Form 8.4

Evaluation of Water Availability in or Near the LP-Gas Facility

A	B	C	D		
Item #	**Water from…**	**Available?**	**Quantitative information**		
1	Public supply or from another piped-in supply through one or more fire hydrants in or near the facility	**X** Yes ☐ No	Hydrant data	Distance from Container(s) on which water will be applied (feet)	Available water flow rate from all hydrants(1) (gpm)
			Hydrant 1	100	1,500
			Hydrant 2		
			Hydrant 3		
2	A nearby static water source (stream, pond, lake, etc).	☐ Yes **X** No	Distance to water source = _____ Feet Time to set up relay = _____ min. Rate of delivery = _____ gpm		
3	Only through mobile water tanker shuttle.	☐ Yes **X** No	Time to set up shuttle = _____ min. Sustainable flow rate = _____ gpm		

(1) **Obtain the available flow rate from the local municipal water authority or the entity that supplies water to the hydrant or conduct a test to determine total available flow rate**

10.4 Illustrative Example # 4

LP-Gas Facility:

A new LP-Gas facility is proposed with four 30,000 gallon containers and is to be located in an industrial bulk plant. The facility is to be designed with a railroad unloading terminal and transport unloading stations. The LPG delivery to customers will be by bobtails. Several bobtail loading ports are proposed in the facility. The facility is in an industrial park.

Other Facility Information:

1) This bulk plant is proposed to be located in an area where there are properties close to the facility. Also, there is population surrounding the facility, which may be within the hazard distance. A movie theater complex exists within 200 ft. of the facility.
2) Two gates through which the transports enter and leave the facility are proposed.
3) Transport unloading risers are 2 inches in diameter. Vapor equalization lines are 1-1/4 inches diameter.
4) Liquid outlet lines (2 inch diameter) are manifolded to feed multiple bobtail loading stations.
5) The containers do not have any special protection. However, a redundant & fail-safe system is to be provided in the LP-Gas plant. The plant is to be built to conform to the 2008 edition of NFPA 58 and will fulfill all appurtenance requirements.
6) Two water hydrants are located within the bulk plant. These hydrants are supplied from the town/municipal water supply system.
7) The nearest fire department is located a distance of 1 mile from the facility and is staffed with career firefighters at all times.

Figure 10.4 shows a schematic plan view of the LP-Gas facility used in Example 4.

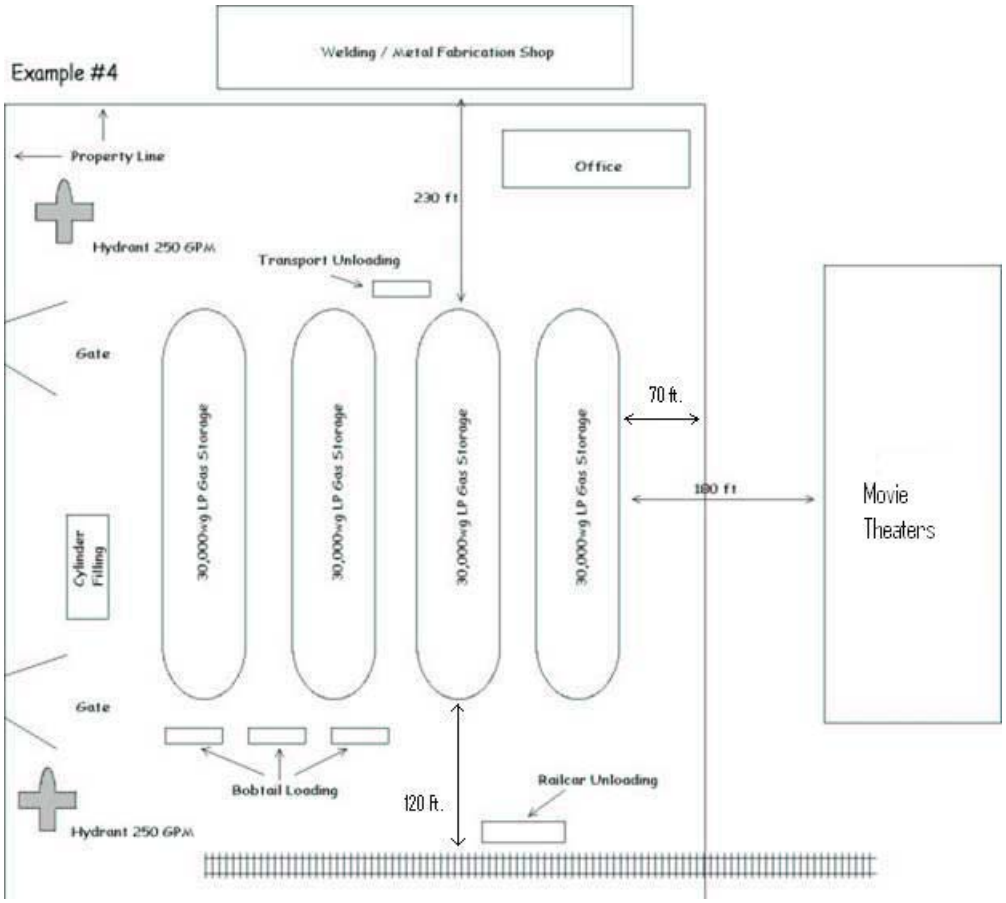

Figure 10.4 Schematic plan view of a LP-Gas facility used in Example 4

Form 4.1
Initial Data on the LP-Gas Facility

A	B	C
Item #	**Information Item**	**Data**
1	Name of the LP-Gas Plant Owner or Operator	**PQR Propane**
2	Contact Name:	
3	Contact Telephone & Fax Numbers	
4	Contact Email Address	
5	Mailing Address	Street 1:
		Street 2:
		City, State, Zip: Central City

Form 4.2
Facility Storage Capacity [1,2,3]

A	B	C	D
Item #	**Individual Container Water Capacity (w.c.) (gallons)**	**Number of containers**	**Total Water Capacity (w.c.) of each container size (gallons)**
1	500		
	1,000		
	2,000		
	4,000		
	10,000		
	18,000		
	30,000	4	120,000
	60,000		
	Other:		
	Other:		
	Other:		
	Other:		
2	**Aggregate Water Capacity[4]**		**120,000**

Notes:
(1) Column D = Column B x Column C.
(2) Parked bobtails, transports and tank cars should not be considered for aggregate capacity calculations.
(3) Do not consider containers that are not connected for use.
(4) For the purpose of this manual, "Aggregate Water Capacity" means any group of single ASME storage containers separated from each other by distances less than those stated in the aboveground containers column of Table 6.3.1.

Form 4.3
Additional Information on the LP-Gas Facility

☐ Existing Facility; Built to NFPA 58 Edition _____ ☑ Proposed Facility (**2008 Edition)**

a) Name of the Plant (if applicable) _____PQR Propane _____

b) Type of LP-Gas Plant: ☐ Commercial ☐ Industrial ☑ Bulk Plant

c) Facility is located in ☐ Rural Area, ☐ Suburban Area, ☐ City Commercial Zone
☑ City Industrial Zone

d) Facility neighbors[§]: ☐ Agri. fields ☐ Commercial Bldgs ☐ Flammable Liquids Storage
(Check all that apply) ☐ Industrial Activity (metal fabrication, cutting and welding, etc)
☑ Manufacturing ☐ Others (explain) _____

e) Geographic Location of Plant:
Address: _____
_____

f) Landmarks, if any: _____
_____

g) LP-Gas liquid supply by: ☐ Bobtail ☑ Truck Transport ☑ Rail Tank Car
(Check all that apply) ☐ Pipeline

h) LP-Gas Distribution by: ☑ Bobtail ☐ Truck Transport ☐ Vapor Piping
Plant (Check all that apply) ☐ Liquid Piping ☐ Dispensing or Vehicle fueling

i) Number of vehicle entrances: ☐ One ☑ Two ☐ More than two

j) Type of access roads to the plant: ☐ Rural ☑ City or Town ☐ Highway
(One check per line) Entrance 1 ☐ Dirt road ☐ Gravel road ☑ Paved
(One check per line) Entrance 2 ☐ Dirt road ☐ Gravel road ☑ Paved

k) Staff presence ☐ Not staffed ☐ Only during transfer operations
☐ Staffed always (24/7) ☑ Only during business hours
☐ Other (Explain) _____

l) Location and distances to Assembly, Educational or Institutional Occupancies surrounding the facility, if any, within 250 ft from the facility boundary in the direction of the assets.
___An Assembly occupancy is present within 200 ft., of the facility._____
_____

m) Is an overview plot plan of the facility attached? ☑ Yes ☐ No

§ All properties either abutting the LP-Gas facility or within 250 feet of the container or transfer point nearest to facility boundary.

Form 5.4
Compliance with Code Requirements for Appurtenances on Containers Having a Water Capacity Greater Than 4,000 Gallons Used in Bulk Plants and Industrial Plants

A	B	C	D		E	F	G
Container #	LP-Gas inlet to and outlet from the container**		Enter Configur-ation Number		Total Number of Product Control Appurtenances		NFPA 58 Section Reference (2008 edition)
					Required by NFPA 58 (applicable edition)	Installed on the container	
1	Vapor	Inlet	5-2	5-2-3	2	2	See §5.7.4.2 and Table 5.7.4.2
		Outlet	5-3	5-3-2	2	2	
	Liquid	Inlet	5-6	5-6A-2	2	2	
		Outlet	5-7	5-7A-1	2	2	

** If the container does not provide an opening for the specific function listed, enter 0 (zero) in columns E and F corresponding to that row.

Form 5.5
Requirements for Transfer Lines of 1½-inch Diameter or Larger, Liquid-into-Containers

A	B	C	D	E	F
Item #	Appurtenance (Either No. 1 or No. 2)**	Appurtenance Provided with the Feature	Installed in the facility?		NFPA 58 Section Reference (2008 edition)
			Yes	No	
1	Emergency Shutoff Valve (ESV) (Ref § 6.12)	Installed within 20 ft. of lineal pipe from the nearest end of the hose or swivel-type connections.	√		6.12.2
		Automatic shutoff through thermal (fire) actuation with melting point of thermal element < 250 °F	√		6.12.6
		Temperature sensitive element (fusible link) installed within 5 ft from the nearest end of the hose or swivel type piping connected to liquid transfer line.	√		6.12.6
		Manual shutoff feature provided at ESV installed location.	√		6.12.10 (1)
		Manual shutoff device provided at a remote location, not less than 25 ft., and not more than 100 ft. from the ESV.	√		6.12.10 (2)
		An ESV is installed on each leg of a multi leg piping each of which is connected to a hose or a swivel type connection on one side and to a header of size 1½ inch in diameter or larger on the other side.	√		6.12.5 6.18.2.6 (1)

		Breakaway protection is provided such that in any pull-away break will occur on the hose or swivel-type connection side while retaining intact the valves and piping on the plant side.	√		6.12.8
2	Back flow Check Valve (BCK)**	Installed downstream of the hose or swivel-type connection	N.A.		6.12.8
		BCK is designed for this specific application.	N.A.		6.12.4
		A BCK is installed on each leg of a multi leg piping each of which is connected to a hose or a swivel type connection on one side and to a header of 1½ inch in diameter or larger on the other side.	N.A.		6.12.5
		Breakaway protection is provided such that in any pull-away break will occur on the hose or swivel-type connection side while retaining intact the valves and piping on the plant side.	N.A.		6.12.8

** In lieu of an emergency shutoff valve, the backflow check valve (BCK) is only permitted when flow is only into the container and shall have a metal-to-metal seat or a primary resilient seat with metal backup, not hinged with a combustible material (6.12.3, 6.12.4).

Form 5.6
Requirements for Transfer Lines of 1½-inch Diameter or Larger, Liquid Withdrawal From Containers

A	B	C	D	E	F
Item #	**Appurtenance**	**Appurtenance Provided with the Feature**	**Installed in the facility?**		**NFPA 58 Section Reference (2008 Edition)**
			Yes	**No**	
1	Emergency Shutoff Valve (ESV) (Ref § 6.12.1)	Installed within 20 ft. of lineal pipe from the nearest end of the hose or swivel-type connections.	√		6.12.2
		Automatic shutoff through thermal (fire) actuation with melting point of thermal element < 250 °F.	√		6.12.6
		Temperature sensitive element installed within 5 ft from the nearest end of the hose or swivel type piping connected to liquid transfer line.	√		6.12.6
		Manual shutoff feature provided at ESV installed location.	√		6.12.10 (1)
		Manual shutoff device provided at a remote location, not less than 25 ft., and not more than 100 ft. from the ESV.	√		6.12.10 (2)
		An ESV is installed on each leg of a multi leg piping each of which is connected to a hose or a swivel type connection on one side and to a header of 1½ inch in diameter or larger on the other side.	√		6.12.5 6.18.2.6 (1)
		Breakaway protection is provided such that in any pull-away break will occur on the hose or swivel-type connection side while retaining intact the valves and piping on the plant side.	√		6.12.8
		Number of ESV's in liquid withdrawal service	2		

Note: If more than one ESV is installed in the facility, use one Form 5.6 for each ESV.

Form 5.7
Requirements for Vapor Transfer Lines 1¼-inch Diameter or Larger

A	B	C	D	E	F
Item #	**Appurtenance**	**Appurtenance Provided with the Feature**	**Installed in the facility?**		**NFPA 58 Section Reference (2008 edition)**
			Yes	**No**	
1	Emergency Shutoff Valve (ESV) (Ref § 6.12.1)	Installed within 20 ft. of lineal pipe from the nearest end of the hose or swivel-type connections.	√		6.12.2
		Automatic shutoff through thermal (fire) actuation with melting point of thermal element < 250 ^{o}F	√		6.12.6
		Temperature sensitive element installed within 5 ft from the nearest end of the hose or swivel type piping connected to liquid transfer line.	√		6.12.6
		Manual shutoff feature provided at ESV installed location.	√		6.12.10 (1)
		Manual shutoff device provided at a remote location, not less than 25 ft., and not more than 100 ft. from the ESV.	√		6.12.10 (2)
		An ESV is installed on each leg of a multi leg piping each of which is connected to a hose or a swivel type connection on one side and to a header of 1-1/4 inch in diameter or larger on the other side.	√		6.12.5 6.18.2.6 (1)
		Breakaway protection is provided such that in any pull-away break will occur on the hose or swivel-type connection side while retaining intact the valves and piping on the plant side.	√		6.12.8
2	Back flow Check Valve (BCK)**	Installed downstream of the hose or swivel-type connection	√		6.12.8
		BCK is designed for this specific application.	√		6.12.3 and 6.12.4
		A BCK is installed on each leg of a multi leg piping each of which is connected to a hose or a swivel type connection on one side and to a header of 1-1/4 inch in diameter or larger on the other side.	√		6.12.5
		Breakaway protection is provided such that in any pull-away break will occur on the hose or swivel-type connection side while retaining intact the valves and piping on the plant side.	√		6.12.8

** In lieu of an emergency shutoff valve, the backflow check valve (BCK) is only permitted when flow is only into the container and it shall have a metal-to-metal seat or a primary resilient seat with metal backup, not hinged with a combustible material (6.12.3, 6.12.4).

Form 5.8
Evaluation of Redundant Fail-Safe Design

A	B		C	D	E	F
Item #	Description		Features	Installed in the facility? Yes	Installed in the facility? No	NFPA 58 Section Reference (2008 edition)
1	Container Sizes for which the appurtenances are provided		Appurtenances and Redundant Fail-Safe equipment are provided for each container of water capacity 2,001 gal. through 30,000 gal.	√		6.26.3 and 6.26.4
2	Liquid or Vapor withdrawal (1-1/4 in. or larger)		Internal Valve with integral excess flow valve or excess flow protection	√		6.26.3.1
			Positive Shutoff Valve installed as close as practical to the Internal Valve	√		6.26.3.4
3	Liquid or Vapor Inlet		Internal Valve with integral excess flow valve or excess flow protection or Back Flow Check valve	√		6.26.3.5
			Positive Shutoff Valve installed as close as possible to the Internal Valve or the back flow check valve	√		6.26.3.5
4	Railcar Transfer	Flow Into or Out of Railroad tank car	Approved emergency shutoff valves installed in the transfer hose or the swivel-type piping at the tank car end	√		6.18.2.6 (1) and 6.26.4.1
		Flow Only into railroad tank car	Approved emergency shutoff valve or backflow check valve installed in the transfer hose or the swivel-type piping at the tank car end	√		6.18.2.6 (2) and 6.26.4.1
5	Cargo Tank Transfer		Protection provided in accordance with 6.26.4.1	N.A.		6.26.4.1
6	Automatic closure of all primary valves (IV & ESV) in an Emergency		Actuated by Fire Detection	√		6.26.4.2
			Actuated by a hose pull-away due to vehicle motion	√		6.26.4.2
7	Manually operated remote shutdown of IV and ESV		Remote shutdown station within 15 ft of the point of transfer?	√		6.26.4.3 (A)
			Another remote shutdown station between 25 ft and 100 ft of the transfer point?	√		6.26.4.3 (B)
			Shutdown stations will shut down electrical power supply, if any, to the transfer equipment and primary valves?	√		6.26.4.3
			Signs complying with the requirements of 6.24.4.3 (C) provided?	√		6.26.4.3 (C)

Note: If the facility does not have a rail terminal, write the word NA in both the "Yes" column and the "No" column in item 4 of this Form in the railroad tank car row. Similar option is also available if there is no cargo tank vehicle transfer station.

Form 6.1
Evaluation of Physical Protection and Other Measures

A	B	C	D	E	F
#	Item	Features	Installed in the facility?		NFPA 58 Section Reference (2008 Edition)
			Yes	No	
1	Lighting‡	Provide lighting for nighttime operations to illuminate storage containers, container being loaded, control valves, and other equipment	√		6.18.5
2	Vehicle impact protection	Protection against vehicular (traffic) impacts on containers, transfer piping and other appurtenances is designed and provided commensurate with the size of vehicles and type of traffic in the facility. (Example protection systems include but not limited to (1) Guard rails, (2) Steel bollards or crash posts, (3) Raised sidewalks.	√		6.9.3.10 and 6.19.3.2
3	Protection against corrosion	Provide protection against corrosion where piping is in contact with supports or corrosion causing substances.	√		6.9.3.11
Complete only 4A or 4B					
4A	Perimeter Fence	Is an industrial type or chain link fence of at least 6 ft high or equivalent protection provided to enclose (all around) container appurtenances, pumping equipment, loading and unloading and container filling facilities?	√		6.18.4.2
		Are at least two means of emergency accesses (gates) from the enclosure provided? **NOTE: Write "N.A." (not applicable) if** (i) The area enclosed is less than 100 ft^2, or (ii) The point of transfer is within 3 ft of the gate, or containers are not filled within the enclosure	√		6.18.4.2 (A)
		Is a clearance of at least 3 feet all around to allow emergency access to the required means of egress been provided?	√		6.18.4.2 (B)
	Guard Service	If a guard service is provided, does this service cover the LP-Gas plant and are the guard personnel provided with appropriate LP-Gas related training, per section 4.4 of NFPA 58?	NA		6.18.4.3
4B	Lock-in-Place devices	Are Lock-in-Place devices provided to prevent unauthorized use or operation of any container appurtenance, system valves, or equipment in lieu of the fence requirements above?	NA		6.18.4.2 (C)

Note: Fill only items 1, 2, 3, and 4A or 4B. Indicate with "NA" when not filling the "Yes" or "No" column.
‡ Indicate with "NA" if the facility is not operated at night.

Form 6.2
Assessment of Sources of Ignition and Adjacent Combustible Materials

A	B	C	D	E
#	Sources of Ignition and Requirements Pertaining to Adjacent Combustible Materials	Is the Facility compliant?		NFPA 58 Section Reference (2008 Edition)
		Yes	No	
1	Are combustible materials, weeds and tall grass not closer than 10 ft. from each container?	√		6.4.5.2
2	Is a distance at least 20 ft. provided between containers and tanks containing flammable liquids with flash point less than 200 ^{o}F (ex., gasoline, diesel)?	√		6.4.5.5
3	Are electrical equipment and wiring installed per Code requirements?	√		6.22.2
4	Is open flame equipment located and used according to Code?	√		6.22.3.1
5	Are ignition control procedures and requirements during liquid transfer operations complied with.?	√		7.2.3.2
6	Is an approved, portable, dry chemical fire extinguisher of minimum capacity 18 Lbs. and having a B:C rating provided in the facility?	√		6.25.4.2
7	Is an approved, portable, dry chemical fire extinguisher of minimum capacity 18 Lbs. and having a B:C rating provided on each truck or trailer used to transport portable containers?	√		9.4.7
8	Is the prohibition on smoking within the facility premises strictly enforced?	√		7.2.3.2 (B) & 9.4.10

Note: Insert "NA" in both "Yes" and "No" columns of any items that are not applicable.

Form 6.3

Separation Distances from Containers to Buildings, Property Lines that can be Built upon, Inter-container Distances, and Aboveground Flammable or Combustible Storage Tanks

A	B	C	D	E	F	G
#	**Container Size Range in gal (W.C.)**	**Separation between a property line, important building or other property and the <u>nearest</u> container which is**	**Minimum Distance (ft)**	**Is the Facility compliant?**		**NFPA 58 Section Reference (2008 Edition)**
				Yes	**No**	
1	501 through 2,000	Above Ground	25	NA	NA	6.3.1 and Table 6.3.1
		Underground or Mounded	10	NA	NA	
		Between containers	3	NA	NA	
2	2,001 through 30,000	Above Ground	50	√		
		Underground or Mounded	50	NA	NA	
		Between containers	5	√		
3	30,001 through 70,000	Above Ground	75	NA	NA	
		Underground or Mounded	50	NA	NA	
		Between containers	¼ sum of diameters of adjacent containers	NA	NA	
4	70,001 through 90,000	Above Ground	100	NA	NA	
		Underground or Mounded	50	NA	NA	
		Between containers	¼ sum of diameters of adjacent containers	NA	NA	
5	All sizes greater than 125 gal	Separation distance between a LP-Gas container and an above ground storage tank containing flammable or combustible liquids of flash points below 200 ^{o}F.	20	N.A.	N.A.	6.4.5.4 and 6.4.5.5

Note: If any of the container sizes indicated in the above form are not present in the facility, enter "NA" in both Yes and No columns.

Form 6.4
Separation Distances between Points of Transfer and other Exposures

A	B		C	D	E	F	G
#	Type of Exposure within or outside the facility boundary		Check if exposure is present	Minimum Distance (ft)	Is the Facility compliant?		NFPA 58 Section Reference (2008 Edition)
					Yes	No	
1	Buildings, mobile homes, recreational vehicles, and modular homes with fire-resistive walls			10	NA	NA	Section 6.5.3 Table 6.5.3
2	Buildings with other than fire resistive walls			25	NA	NA	
3	Building wall openings or pits at or below the level of the point of transfer			25	NA	NA	
4	Line of adjoining property that can be built upon			25	NA	NA	
5	Outdoor places of public assembly, including school yards, athletic fields, and playgrounds		√	50	√		
6	Public ways, including public streets, highways, thoroughfares, and sidewalks	From points of transfer in LP-Gas dispensing stations and at vehicle fuel dispensers.	√	10	√		
		From other points of transfer	√	25	√		
7	Driveways			5	NA	NA	
8	Mainline railroad track centerlines			25	√		
9	Containers other than those being filled			10	NA	NA	
10	Flammable and Class II combustible liquid dispensers and aboveground and underground containers			20	NA	NA	
11	Flammable and Class II combustible liquid dispensers and the fill connections of LPG containers			10	NA	NA	
12	LP-Gas dispensing device located close to a Class I liquid dispensing device.			10	NA	NA	6.24.4.3

NOTE: Place a checkmark in column C against an exposure that is present in or around the facility. Fill columns E or F for only those rows for which there is a checkmark in column C.

Form 6.5
Special Protection Measures –Passive Systems

A	B	C	D		E
#	Special Protection Option	Question	Is the Facility compliant?		NFPA 58 Section Reference (2008 Edition)
			Yes	No	
1	Container Insulation	Insulation provided on each of the containers?	NA		6.25.5.1
		Insulation material complies with the requirements of section 6.25.5.1of NFPA 58?	NA		6.25.5.1 and 6.25.5.2
2	Mounding of containers	Each container in the facility is mounded?	NA		6.25.5.3
		Mounding complies with each requirement under section 6.6.6.3 of NFPA 58.	NA		6.25.5.3
3	Burying of containers	Each container in the facility is buried?	NA		6.25.5.4
		Buried containers comply with each requirement under section 6.6.6.1 of NFPA 58.	NA		6.6.6.1 & 6.25.5.4

Form 6.7
Protection Against Vehicular Impact

#	System Protected	Is physical protection provided?		Type of physical protection installed
		Yes	No	
1	Storage containers	√		Highway Barriers
2	Transfer stations	√		Concrete Bollards
3	Entry way into the plant	√		Steel Reinforced Gate

Table 7.1
Distances to Various Types of Propane Hazards Under Different Release Models**

Model #	Details of the Propane Release Model Releases from or due to		Vapor Dispersion Distance to LFL (ft)	Explosion Hazard Distance (ft)	Fire Ball Radiation Distance (ft)
1A	Bobtail hose failure. Release of the entire inventory in the hose, quickly.	1" ID x 150 ft hose length	250	110	50
1B		1" ID x 120 ft hose length	230	103	45
1C		1" ID x 75 ft hose length	190	90	40
2a	Release of the inventory in a transfer piping 1" x 30 ft + @ 20 gpm for 10 min., due to failed excess flow valve.		135	120	25
2b	Release of the inventory in a transfer piping 2" x 30 ft + @80 gpm for 10 mins.		230	252	48
2c	Release of the inventory in a transfer piping 2" x 80 ft. @ 70 gpm for 10 mins.		328	235	74
2d	Release of the inventory in a transfer piping 2.5" x 30 ft @80 gpm for 10 mins.		269	252	59
2e	Release of the inventory in a transfer piping 3" x 30 ft + @100 gpm for 10 mins.		312	287	69
2f	Release of the inventory in a transfer piping 3" x 18 ft + @100 gpm for 10 mins.		256	284	55
3	Release from the container pressure relief valve		No ignitable vapor concentration at ground level		
4	Release from a 1" ID x 150 ft transfer piping to a vaporizer and reduced flow from a partially open excess flow valve @ 20 gpm for 10 min.		250	120	50
5	Leak from a corrosion hole in a transfer pipe at a back pressure of 130 psig (corresponding to 80 ^{o}F) for 60 min. Hole size is ¼" ID.		110	120	5
6	Release of the entire inventory in a 2" ID x 20 ft., transfer hose.		195	90	40
6a	Release of the entire inventory in a 2.5 inch dia. transfer hose x 16 ft. length		215	98	45
6b	Release of the entire inventory in a 3-inch dia. transfer hose x 12 ft. length		230	100	46
7	Transport hose blow down: Hose size 2" ID, 20 ft length release for 3min., from a Transport after the tank is filled.		25	30	<5
7a	Transport hose blow down: Hose size 2.5" ID, 16 ft length release for 3min., from a Transport after the tank is filled.		25	29	<5
7b	Transport hose blow down: Hose size 3" ID, 16 ft length release for 3min., from a Transport after the tank is filled.		31	36	<5

** Results from models described in Appendix B. The results are rounded to the nearest 5 feet.

Form 7.1
Types of Occupancies[1] Near or Surrounding the LP-Gas Facility

Type of Occupancies	Model # from Table 7.1	Hazard Distance[2] (feet)	Is Occupancy located within the hazard distance from the Facility?	
			Yes	No
Assembly Occupancies (Places of worship, Libraries, Theaters and Auditoriums, Food or Drink Bars, Sports Stadiums, Amusement Parks, Transportation Centers, etc. with 50 or more people).	6B	230	√	
Institutional Occupancies (Elderly Persons Home or Nursing Home, Hospitals, Alcohol & Drug Rehabilitation Centers, Prisons)	6B	230		√
Educational Occupancies (Elementary Schools, Day Care facilities, etc).	6B	230		√

NOTES: (1) Different types of occupancies are defined in NFPA 5000

(2) Table 7.1 provides a number of scenarios that can result in propane release, and the resulting area exposed for different ignition mechanisms. Determine the scenarios that are applicable to the facility, for the quantities that can be released, and enter the greatest value from Table 7.1. Use the hose diameters and length that will be used at the facility if they differ from the ones in Table 7.1 and recalculate the hazard distances using a spreadsheet method that is available at npga.org. Some scenarios may not be applicable to an installation because of other mitigation measures implemented, such as a hose management procedure to minimize the possibility of hose failure.

Form 7.2
Exposure to LP-Gas Facility from External Hazards

A	B	C	D
Item #	**Type of Neighboring Operation**	**Hazard exists to the LP-Gas Facility**	
		YES	**NO**
1	Petroleum and other hazardous material storage, wholesale dispensing, etc.		√
2	Metal cutting, welding, and metal fabrication	√	
3	Industrial Manufacturing that can pose external hazards		√
4	Ports, rail yards and trans-shipment terminals handling flammable and explosive materials.		√
5	Other operations that may pose hazards (gasoline and other hazardous material dispensing stations, fertilizer storage, etc).		√

NOTE: If a particular activity indicated in column B does not exist, fill both "Yes" and "No" columns with "NA."

Form 8.1
Data on the Responding Fire Department

A	B		C
Item #	**Data Item**		**Data Entry**
1	Name of the Fire Department (FD).		City F.D.
2A	Name of the person in the FD assisting with the data acquisition.		Charles Holt
2B	Position of the person in the FD assisting with the data acquisition.		Chief
3A	Date on which FD data was collected.		5/23/09
3B	Name of the person collecting the data.		Roger Mills
4	Number of firefighters on duty at any time.		10
5	Average number of firefighters available for response.		8
6A	Number of firefighters qualified to	"Firefighter I" level.	4
6B		"Firefighter II" level.	6
7A	Number of firefighters who would:	Respond on the first alarm to the facility.	8
7B		Respond on the first alarm and who are qualified to the operations level requirements of NFPA 472 or similar local requirements	8
7C		Respond on the first alarm with specific knowledge and training on the properties of LP-Gas and LP-Gas fires.	8
8A	Number of fire apparatus that have the capability to deploy a 125 gpm hose line supplied by onboard water for at least 4 minutes, and, which:	Are in service in the department.	3
8B		Would respond on a first alarm.	2

Form 8.2
Response Time data for the Fire Departments

A	B	C	D	E
Company or Department	**Time in Minutes for**			
	Alarm Receipt & Handling	**Turnout**	**Travel**	**Total Time**
City F.D.	60s	2 min.	90s	4.5 min.

Note: Number in Column E = Sum of numbers from Columns B through D.

Form 8.3

Water Flow Rate and Total Water Volume Required to Cool Containers Exposed to a Fire

A	B	C	D	E	F	G	H
Item #	**ASME Container Size (gallons)**	**Total Surface Area of each Container[1] (ft^2)**	**Surface Area of each container to be Cooled (ft^2)**	**Water flow rate required per container (gpm)**	**Number of containers of the size indicated‡**	**Total Water flow rate required (gpm)**	**Total volume of water required for 10 min (gal)**
1	500	86	43	10.8			
	1,000	172	86	21.5			
	2,000	290	145	36.3			
	4,000	374	187	46.8			
	6,500	570	285	71.3			
	9,200	790	395	98.8			
	12,000	990	495	123.8			
	18,000	1,160	580	145.0			
	30,000	1,610	805	201.3	4	604	
	45,000	2,366	1,183	295.8			
	60,000	3,090	1,545	386.3			
	90,000	4,600	2,300	575.0			
	Other Size						
2a	Calculated water flow rate for container protection					604	
2b	Water flow rate rounded up to nearest multiple of 125					625	
3	Water for firefighter protection, if required					250	
4	Total water flow rate and volume					875	8,750

Note: Column D = (1/2) x Column C Column E = 0.25 (gpm/ft^2) x Column D ;
Column G = Column F x Column E Column H = 10 x Column G
Line 2a, Column G and Column H are the sum of numbers in each row above line 2 of each column.
Line 4, Column G and Column H are the sum of numbers in rows 2b and 3.

‡ Consider only 3 containers for water supply evaluations even if the number of containers in a group is more than 3. See Section 8.2.

1 ASME container approximate dimensions

Form 8.4

Evaluation of Water Availability in or Near the LP-Gas Facility

A	B	C	D		
Item #	**Water from…**	**Available?**	**Quantitative information**		
1	Public supply or from another piped-in supply through one or more fire hydrants in or near the facility	☒ Yes ☐ No	Hydrant data	Distance from Container(s) on which water will be applied (feet)	Available water flow rate from all hydrants[1] (gpm)
			Hydrant 1	75	500
			Hydrant 2	90	
			Hydrant 3		
2	A nearby static water source (stream, pond, lake, etc).	☐ Yes ☒ No	Distance to water source = _____ Feet Time to set up relay = _____ min. Rate of delivery = _____ gpm		
3	Only through mobile water tanker shuttle.	☐ Yes ☒ No	Time to set up shuttle = _____ min. Sustainable flow rate = _____ gpm		

(1) Obtain the available flow rate from the local municipal water authority or the entity that supplies water to the hydrant or conduct a test to determine total available flow rate.

Evaluation Summary for the Proposed LP-Gas Facility

Form 9.2
Analysis Summary on Exposure from and to the LP-Gas Facility

A	B	C	D	E
Item #	**CHAPTER Title**	**Section & Title**	**Reference FORM #**	**Number of "Yes" checked**
1	Exposure to and from Other Properties	7.1 Exposure to off-site properties and persons from in-plant propane releases	7.1	1
		7.2 Exposure to propane facility from external events.	7.2	1

If the entry number in column E ("Yes"), Form 9.2 corresponding to Form 7.1 is greater than zero, consider one or more of the following design alternatives.

1 Consider moving the container or the transfer point to a different location, if possible and space exists, so that the property or the person is beyond the hazard distance.
2 Provide "Redundant and Fail-safe Product Control Measures". Complete Form 9.4 to ensure compliance.
3 Institute other technical measures such as installing gas and flame detectors (connected to facility shut down systems), sounding alarm outside facility premises, etc.
4 Institute administrative controls such as additional training for personnel, more frequent inspections of hoses and transfer piping, etc.

If the entry number in column E ("Yes"), Form 9.2 corresponding to Form 7.2 is greater than zero, consider one or more of the following design alternatives.

1 Implement procedures to monitor neighboring activity.
2 Install means in the adjacent plant to shut down the LP-Gas plant in case of an emergency in that plant.

Form 9.3

Analysis Summary on Fire Department Evaluations

A	B	C	D	E	F
Item #	**CHAPTER Title**	**Section & Title**	**Reference FORM #**	**Number "zeros" entered in Column C, Lines 6 through 8 of Form 8.1**	**Number of "Yes" checked in Column C of Form 8.4**
1	Fire department capability, adequacy of water supply and Emergency Planning	8.1 Data on the Fire Department	8.1	0	
2		8.2 Fire response water needs and availability	8.4		1

If the entry number in row 1, Column E of Form 9.3 is greater than zero, consider one or more of the following design alternatives.

1 Discuss with the local Fire Department the needs of the LP-Gas facility and the evaluation results on the capability and training inadequacies of the Department.

2 Consider developing a cadre of personnel within the LP-Gas facility to respond to emergencies.

3 Institute container special protection system based on active protection approaches or passive approaches. Complete Form 9.6 and Form 9.7 below.

If the entry number in row 2, Column F of Form 9.3 is equal to zero, consider one or more of the following design alternatives.

1 Provide special protection (other than water spray or monitor systems) to containers, satisfying the requirements of section 6.23.5 of NFPA 58, 2008 edition. Complete Form 9.6 to ensure compliance.

Consider implementing the various options indicated in Table 9.1.

Form 9.6
Special Protection Measures –Passive Systems

A	B	C	D		E
Item #	**Special Protection Option**	**Question**	**Proposed for the facility?**		**NFPA 58 Section Reference (2008 Edition)**
			Yes	**No**	
1	Container Insulation	Insulation provided on each of the containers?		√	6.25.5.1
		Insulation material complies with the requirements of section 6.25.5.1 of NFPA 58?		√	6.25.5.1 and 6.25.5.2
2	Mounding of containers	Each container in the facility is mounded?		√	6.25.5.3
		Mounding complies with each requirement under section 6.6.6.3 of NFPA 58.		√	6.25.5.3
3	Burying of containers	Each container in the facility is buried?		√	6.25.5.4
		Buried containers comply with each requirement under section 6.6.6.1 of NFPA 58.		√	6.6.6.1 & 6.25.5.4

Since this is a newly proposed LPG-Gas plant, the information developed in this Fire Safety Analysis must be communicated to local responders for inclusion in their emergency planning.

Glossary and Acronyms

GLOSSARY

Advisory Committee: An advisory panel of members from the propane industry, set up by the NPGA to review the technical work and provide guidance during the preparation of this FSA manual.

Bulk Plant: A facility whose primary purpose is to store in large quantities LP-Gas and distribute it by trucks, bobtails or cylinders.

Commercial Plant: A facility in which LP-Gas is stored on site and used in an office building, a restaurant, a building construction site, an apartment complex, a fast-food place, etc.

Facility: A facility refers to a stationary plant handling, storing or transferring LP-Gas.

High Value Populations: Schools, hospitals, retirement homes, police or fire stations, playgrounds, churches, swimming pools, etc.

Industrial Plant: A facility in which LP-Gas is stored on site and used in a factory, a fabrication shop, a repair garage, a warehouse, a place where a product is manufactured or produced, an agricultural processing plant, a chemical process plant, etc.

Installation: An installation is a facility containing one or more LP-Gas ASME storage tanks used to store LP-Gas in the form of a pressurized liquefied gas.

ACRONYMS

AHJ	Authority having jurisdiction
EPA	US Environmental Protection Agency
EAP	Emergency Action Plan (for the LP-Gas plant)
FD	Fire Department (Local) nearest to the Plant
FSA	Fire Safety Analysis (Performed to satisfy the requirements of NFPA 58, section 6.23)
NFPA	National Fire Protection Association
NPGA	National Propane Gas Association
OSHA	US Occupational Safety and Health Administration (of the US Dept. of Labor)
PERC	Propane Education & Research Council

Appendix A

Fill-in Forms

This Appendix contains a set of forms copied from the different chapters in this manual. The form number corresponds to the respective forms in chapters 4 through 9; the first number digit represents the chapter number. Where the forms refer to a figure, it is understood that they refer to the figures shown in the main body of the manual.

It is anticipated that these tables will be photocopied and used (as many times as needed) to perform the Fire Safety Analysis of one or more LP-Gas facilities. The details of how to use the tables and what the results mean are indicated in the respective chapters; the user should refer to the information in the various chapters before using these tables.

The filled in tables may then be included in the written Fire Safety Analysis that has to be maintained by the LP-Gas facility owner/operator. If a need exists, the same report may be submitted to the Authority Having Jurisdiction (AHJ).

Form 4.1
Initial Data on the LP-Gas Facility

A	B	C
Item #	**Information Item**	**Data**
1	Name of the LP-Gas Facility Owner or Operator	
2	Contact Name:	
3	Contact Telephone & Fax Numbers	
4	Contact Email Address	
5	Mailing Address	Street 1:
		Street 2:
		City, State, Zip:

Form 4.2
Facility Storage Capacity [1,2,3]

A	B	C	D
Item #	**Individual Container Water Capacity (w.c.) (gallons)**	**Number of containers**	**Total Water Capacity (w.c.) of each container size (gallons)**
1	500		
	1,000		
	2,000		
	4,000		
	10,000		
	18,000		
	30,000		
	60,000		
	Other:		
	Other:		
	Other:		
	Other:		
2	**Aggregate Water Capacity[4]**		

Notes:
(1) Column D = Column B x Column C.
(2) Parked bobtails, transports and tank cars should not be considered for aggregate capacity calculations.
(3) Do not consider containers that are not connected for use.
(4) For the purpose of this manual, "Aggregate Water Capacity" means any group of single ASME storage containers separated from each other by distances less than those stated in the aboveground containers column of Table 6.3.1.

If the aggregate water capacity of the LP-Gas facility is less than or equal to 4,000 gallon (w.c.), no further assessment is required.

YOU CAN STOP HERE.

Form 4.3
Additional Information on the LP-Gas Facility

☐ Existing Facility; Built to NFPA 58 Edition _____ ☐ Proposed Facility

a) Name of the Facility (if applicable) _____

b) Type of LP-Gas Facility ☐ Commercial ☐ Industrial ☐ Bulk Plant

c) Facility is located in ☐ Rural Area, ☐ Suburban Area, ☐ City Commercial Zone
☐ City Industrial Zone

d) Facility neighbors[§]: ☐ Agri. fields ☐ Commercial Bldgs. ☐ Flammable Liquids Storage
(Check all that apply) ☐ Industrial Activity (metal fabrication, cutting and welding, etc)
☐ Manufacturing ☐ Others (explain) _____

e) Geographic Location of Facility/Address: _____
_____

f) Landmarks, if any: _____
_____

g) LP-Gas liquid supply by: ☐ Bobtail ☐ Truck Transport ☐ Rail Tank Car
(Check all that apply) ☐ Pipeline

h) LP-Gas Distribution by: ☐ Bobtail ☐ Truck Transport ☐ Vapor Piping
(Check all that apply) ☐ Liquid Piping ☐ Dispensing or Vehicle Liquid fueling

i) Number of Vehicle Entrances: ☐ One ☐ Two ☐ More than two

j) Type of Access Roads to the Facility ☐ Rural ☐ City or Town ☐ Highway
(One check per line) Entrance 1 ☐ Dirt road ☐ Gravel road ☐ Paved
(One check per line) Entrance 2 ☐ Dirt road ☐ Gravel road ☐ Paved

k) Staff presence ☐ Not staffed ☐ Only during transfer operations
☐ Staffed always (24/7) ☐ Only during business hours
☐ Other (Explain) _____

l) Location and distances to Assembly, Educational or Institutional Occupancies surrounding the facility, if any, within 250 ft from the facility boundary in the direction of the assets.

_____
_____

m) Overview plot plan of the facility attached? ☐ Yes ☐ No

§ All properties either abutting the LP-Gas facility or within 250 feet of the container or transfer point nearest to facility boundary.

Form 5.1

Compliance with Code Requirements for Appurtenances on Containers of 2,000 Gallons Water Capacity or Less

A	B	C	D	E
Container #	Service Configuration Sub Figure (in Figure 5-1)	Number of Product Control Appurtenances		NFPA 58 Section Reference (2008 edition)
		Required by NFPA 58 (applicable edition)	Installed on the Container	
1				5.7.4.1 and Table 5.7.4.1
2				
3				
4				
5				
6				

If, in Form 5.1, any one of the numbers in column D is less than the number in Column C of the corresponding row, then these items must be addressed and brought into compliance with the specific edition of NFPA 58 that the facility was constructed to.

Form 5.2

Compliance with Code Requirements for Appurtenances on Containers Of water capacity 2001 gallons through 4,000 gallons Used in Residential and Commercial Facilities

A	B	C	D	E
Container #	Service Configuration Sub Figure (in Figure 5-1)	Number of Product Control Appurtenances		NFPA 58 Section Reference (2008 edition)
		Required by NFPA 58 (applicable edition)	Installed on the Container	
1				5.7.4.1 and Table 5.7.4.1
2				
3				
4				
5				
6				

If, in Form 5.2, any one of the numbers in column D is less than the number in Column C of the corresponding row, these items must be addressed and brought into compliance with the specific edition of NFPA 58 that the facility was constructed to.

Form 5.3

Compliance with Code Requirements for Appurtenances on Containers Having a Water Capacity of 2,001 through 4,000 Gallons Used in Bulk Plants and Industrial Plants

A	B	C	D	E	F	G
Container #	**LP-Gas inlet to and outlet from the container****		**Figure #**	**Total Number of Product Control Appurtenances**		**NFPA 58 Section Reference (2008 edition)**
				Required by NFPA 58 (applicable edition)	**Installed on the container**	
1	**Vapor**	Inlet	5-2			See §5.7.4.2 and Table 5.7.4.2
		Outlet	5-3			
	Liquid	Inlet	5-4			
		Outlet	5-5			
2	**Vapor**	Inlet	5-2			
		Outlet	5-3			
	Liquid	Inlet	5-4			
		Outlet	5-5			
3	**Vapor**	Inlet	5-2			
		Outlet	5-3			
	Liquid	Inlet	5-4			
		Outlet	5-5			
4	**Vapor**	Inlet	5-2			
		Outlet	5-3			
	Liquid	Inlet	5-4			
		Outlet	5-5			

****** If the container does not provide an opening for the specific function listed, enter 0 (zero) in columns E and F corresponding to that row.

If, in Form 5.3, any one of the numbers in column F is less than the number in Column E of the corresponding row, these items must be addressed and brought into compliance with the specific edition of NFPA 58 that the facility was constructed to.

Form 5.4

Compliance with Code Requirements for Appurtenances on Containers Having a Water Capacity Greater Than 4,000 Gallons Used in Bulk Plants and Industrial Plants

A	B	C	D		E	F	G
Container #	**LP-Gas inlet to and outlet from the container****		**Enter Configur-ation Number**		**Total Number of Product Control Appurtenances**		**NFPA 58 Section Reference (2008 edition)**
					Required by NFPA 58 (applicable edition)	**Installed on the container**	
1	**Vapor**	Inlet	5-2				See §5.7.4.2 and Table 5.7.4.2
		Outlet	5-3				
	Liquid	Inlet	5-6				
		Outlet	5-7				
2	**Vapor**	Inlet	5-2				
		Outlet	5-3				
	Liquid	Inlet	5-6				
		Outlet	5-7				
3	**Vapor**	Inlet	5-2				
		Outlet	5-3				
	Liquid	Inlet	5-6				
		Outlet	5-7				
4	**Vapor**	Inlet	5-2				
		Outlet	5-3				
	Liquid	Inlet	5-6				
		Outlet	5-7				

****** If the container does not provide an opening for the specific function listed, enter 0 (zero) in columns E and F corresponding to that row.

If in Form 5.4 any one of the numbers in column F is less than the number in Column E of the corresponding row, these items must be addressed and brought into compliance with the specific edition of NFPA 58 that the facility was constructed to.

Form 5.5
Requirements for Transfer Lines of 1½-inch Diameter or Larger, Liquid-into-Containers

A	B	C	D	E	F
Item #	**Appurtenance (Either No. 1 or No. 2)****	**Appurtenance Provided with the Feature**	**Installed in the facility?**		**NFPA 58 Section Reference (2008 edition)**
			Yes	**No**	
1	Emergency Shutoff Valve (ESV) (Ref § 6.12)	Installed within 20 ft. of lineal pipe from the nearest end of the hose or swivel-type connections.			6.12.2
		Automatic shutoff through thermal (fire) actuation with melting point of thermal element < 250 °F			6.12.6
		Temperature sensitive element (fusible link) installed within 5 ft from the nearest end of the hose or swivel type piping connected to liquid transfer line.			6.12.6
		Manual shutoff feature provided at ESV installed location.			6.12.10 (1)
		Manual shutoff device provided at a remote location, not less than 25 ft., and not more than 100 ft. from the ESV.			6.12.10 (2)
		An ESV is installed on each leg of a multi leg piping each of which is connected to a hose or a swivel type connection on one side and to a header of size 1½ inch in diameter or larger on the other side.			6.12.5 6.18.2.6 (1)
		Breakaway protection is provided such that in any pull-away break will occur on the hose or swivel-type connection side while retaining intact the valves and piping on the plant side.			6.12.8
2	Back flow Check Valve (BCK)**	Installed downstream of the hose or swivel-type connection			6.12.8
		BCK is designed for this specific application.			6.12.4
		A BCK is installed on each leg of a multi leg piping each of which is connected to a hose or a swivel type connection on one side and to a header of 1½ inch in diameter or larger on the other side.			6.12.5
		Breakaway protection is provided such that in any pull-away break will occur on the hose or swivel-type connection side while retaining intact the valves and piping on the plant side.			6.12.8

****** In lieu of an emergency shutoff valve, the backflow check valve (BCK) is only permitted when flow is only into the container and shall have a metal-to-metal seat or a primary resilient seat with metal backup, not hinged with a combustible material (6.12.3, 6.12.4).

Form 5.6

Requirements for Transfer Lines of 1½-inch Diameter or Larger, Liquid Withdrawal From Containers

A	B	C	D	E	F
Item #	**Appurtenance**	**Appurtenance Provided with the Feature**	**Installed in the facility?**		**NFPA 58 Section Reference (2008 Edition)**
			Yes	**No**	
1	Emergency Shutoff Valve (ESV) (Ref § 6.12.1)	Installed within 20 ft. of lineal pipe from the nearest end of the hose or swivel-type connections.			6.12.2
		Automatic shutoff through thermal (fire) actuation with melting point of thermal element < 250 °F.			6.12.6
		Temperature sensitive element installed within 5 ft from the nearest end of the hose or swivel type piping connected to liquid transfer line.			6.12.6
		Manual shutoff feature provided at ESV installed location.			6.12.10 (1)
		Manual shutoff device provided at a remote location, not less than 25 ft., and not more than 100 ft. from the ESV.			6.12.10 (2)
		An ESV is installed on each leg of a multi leg piping each of which is connected to a hose or a swivel type connection on one side and to a header of 1½ inch in diameter or larger on the other side.			6.12.5 6.18.2.6 (1)
		Breakaway protection is provided such that in any pull-away break will occur on the hose or swivel-type connection side while retaining intact the valves and piping on the plant side.			6.12.8
		Number of ESV's in liquid withdrawal service			

Note: If more than one ESV is installed in the facility, use one Form 5.6 for each ESV.

Form 5.7
Requirements for Vapor Transfer Lines 1¼-inch Diameter or Larger

A	B	C	D	E	F
Item #	**Appurtenance**	**Appurtenance Provided with the Feature**	**Installed in the facility?**		**NFPA 58 Section Reference (2008 edition)**
			Yes	**No**	
1	Emergency Shutoff Valve (ESV) (Ref § 6.12.1)	Installed within 20 ft. of lineal pipe from the nearest end of the hose or swivel-type connections.			6.12.2
		Automatic shutoff through thermal (fire) actuation with melting point of thermal element < 250 ^{o}F			6.12.6
		Temperature sensitive element installed within 5 ft from the nearest end of the hose or swivel type piping connected to liquid transfer line.			6.12.6
		Manual shutoff feature provided at ESV installed location.			6.12.10 (1)
		Manual shutoff device provided at a remote location, not less than 25 ft., and not more than 100 ft. from the ESV.			6.12.10 (2)
		An ESV is installed on each leg of a multi leg piping each of which is connected to a hose or a swivel type connection on one side and to a header of 1-1/4 inch in diameter or larger on the other side.			6.12.5 6.18.2.6 (1)
		Breakaway protection is provided such that in any pull-away break will occur on the hose or swivel-type connection side while retaining intact the valves and piping on the plant side.			6.12.8
2	Back flow Check Valve (BCK)**	Installed downstream of the hose or swivel-type connection			6.12.8
		BCK is designed for this specific application.			6.12.3 and 6.12.4
		A BCK is installed on each leg of a multi leg piping each of which is connected to a hose or a swivel type connection on one side and to a header of 1-1/4 inch in diameter or larger on the other side.			6.12.5
		Breakaway protection is provided such that in any pull-away break will occur on the hose or swivel-type connection side while retaining intact the valves and piping on the plant side.			6.12.8

****** In lieu of an emergency shutoff valve, the backflow check valve (BCK) is only permitted when flow is only into the container and it shall have a metal-to-metal seat or a primary resilient seat with metal backup, not hinged with a combustible material (6.12.3, 6.12.4).

If a checkmark is made in the "No" column of any one of Form 5.5, Form 5.6 or Form 5.7, then these items must be addressed and brought into compliance with the specific edition of NFPA 58 that the facility was constructed to.

If the LP-Gas facility is designed using ALTERNATE PROVISIONS for the installation of ASME CONTAINERS, then continue the analysis below. Otherwise skip Forms 5.8 and 5.9 and go to Chapter 6.

Form 5.8
Evaluation of Redundant Fail-Safe Design

A	B		C	D	E	F
Item #	Description		Features	Installed in the facility? Yes	Installed in the facility? No	NFPA 58 Section Reference (2008 edition)
1	Container Sizes for which the appurtenances are provided		Appurtenances and Redundant Fail-Safe equipment are provided for each container of water capacity 2,001 gal. through 30,000 gal.			6.26.3 and 6.26.4
2	Liquid or Vapor withdrawal (1-1/4 in. or larger)		Internal Valve with integral excess flow valve or excess flow protection			6.26.3.1
			Positive Shutoff Valve installed as close as practical to the Internal Valve			6.26.3.4
3	Liquid or Vapor Inlet		Internal Valve with integral excess flow valve or excess flow protection or Back Flow Check valve			6.26.3.5
			Positive Shutoff Valve installed as close as possible to the Internal Valve or the back flow check valve			6.26.3.5
4	Railcar Transfer	Flow Into or Out of Railroad tank car	Approved emergency shutoff valves installed in the transfer hose or the swivel-type piping at the tank car end			6.18.2.6 (1) and 6.26.4.1
		Flow Only into railroad tank car	Approved emergency shutoff valve or backflow check valve installed in the transfer hose or the swivel-type piping at the tank car end			6.18.2.6 (2) and 6.26.4.1
5	Cargo Tank Transfer		Protection provided in accordance with 6.26.4.1			6.26.4.1
6	Automatic closure of all primary valves (IV & ESV) in an Emergency		Actuated by Fire Detection			6.26.4.2
			Actuated by a hose pull-away due to vehicle motion			6.26.4.2
7	Manually operated remote shutdown of IV and ESV		Remote shutdown station within 15 ft of the point of transfer?			6.26.4.3 (A)
			Another remote shutdown station between 25 ft and 100 ft of the transfer point?			6.26.4.3 (B)
			Shutdown stations will shut down electrical power supply, if any, to the transfer equipment and primary valves?			6.26.4.3
			Signs complying with the requirements of 6.24.4.3 (C) provided?			6.26.4.3 (C)

Note: If the facility does not have a rail terminal, write the word NA in both the "Yes" column and the "No" column in item 4 of this Form in the railroad tank car row. Similar option is also available if there is no cargo tank vehicle transfer station.

If the LP-Gas facility is provided with LOW EMISSION TRANSFER EQUIPMENT, then complete Form 5.9 below. Otherwise skip section 5.3.2 and go to Chapter 6.

Form 5.9
Evaluation of Low Emission Transfer Equipment

A	B	C		D	E	F
Item #	Description	Features		Installed in the facility?		NFPA 58 Section Reference (2008 Edition)
				Yes	No	
1	Transfer into Cylinders or ASME Containers on Vehicles	Delivery Nozzle and Filler Valve- Max. Liquid Release after transfer of 4 cc.	Fixed Maximum Liquid Level Gage not used during transfer operations			6.26.5.1 (B)
2	Transfer into Stationary ASME Containers. Delivery valve and nozzle combination	During product transfer or post transfer uncoupling of the hose, liquid product volume released to the atmosphere	does not exceed 4 cc (0.24 in^3) from a hose of nominal size 1 in or smaller			6.26.5.1 (A)
			does not exceed 15 cc (0.91 in^3) from a hose of nominal size larger than 1 in.			6.26.5.2 (B)
3	Transfer into Stationary ASME Containers Maximum filling limit	Do containers of less than 2,001 gal (w.c.) have an overfilling prevention device or another approved device?				6.26.5.2 (F)
		Do containers of greater than 2,000 gal (w.c.) have a float gage or other non-venting device?				6.26.5.2 (E)
4	Transfer into Stationary ASME Containers Fixed Maximum Liquid Level gage	Not used during routine transfer operations but used to calibrate other non-venting liquid level gages in the container				6.26.5.2 (C,D)

Note: 1) If the facility does not have a particular feature described in the table, write "NA" in both the "Yes" and "No" columns corresponding its row in item 2.

If separation distance reductions are intended, checkmarks made in the "No" column of either Form 5.8 or Form 5.9 must be addressed and brought into compliance with the specific edition of NFPA 58 that the facility was constructed to.

Form 6.1
Evaluation of Physical Protection and Other Measures

A	B	C	D	E	F
#	Item	Features	Installed in the facility?		NFPA 58 Section Reference (2008 Edition)
			Yes	No	
1	Lighting‡	Provide lighting for nighttime operations to illuminate storage containers, container being loaded, control valves, and other equipment			6.18.5
2	Vehicle impact protection	Protection against vehicular (traffic) impacts on containers, transfer piping and other appurtenances is designed and provided commensurate with the size of vehicles and type of traffic in the facility. (Example protection systems include but not limited to (1) Guard rails, (2) Steel bollards or crash posts, (3) Raised sidewalks.			6.9.3.10 and 6.19.3.2
3	Protection against corrosion	Provide protection against corrosion where piping is in contact with supports or corrosion causing substances.			6.9.3.11
Complete only 4A or 4B					
4A	Perimeter Fence	Is an industrial type or chain link fence of at least 6 ft high or equivalent protection provided to enclose (all around) container appurtenances, pumping equipment, loading and unloading and container filling facilities?			6.18.4.2
		Are at least two means of emergency accesses (gates) from the enclosure provided? **NOTE: Write "N.A." (not applicable) if** (i) The area enclosed is less than 100 ft^2, or (ii) The point of transfer is within 3 ft of the gate, or containers are not filled within the enclosure			6.18.4.2 (A)
		Is a clearance of at least 3 feet all around to allow emergency access to the required means of egress been provided?			6.18.4.2 (B)
	Guard Service	If a guard service is provided, does this service cover the LP-Gas plant and are the guard personnel provided with appropriate LP-Gas related training, per section 4.4 of NFPA 58?			6.18.4.3
4B	Lock-in-Place devices	Are Lock-in-Place devices provided to prevent unauthorized use or operation of any container appurtenance, system valves, or equipment in lieu of the fence requirements above?			6.18.4.2 (C)

Note: Fill only items 1, 2, 3, and 4A or 4B. Indicate with "NA" when not filling the "Yes" or "No" column.
‡ Indicate with "NA" if the facility is not operated at night.

Form 6.2
Assessment of Sources of Ignition and Adjacent Combustible Materials

A	B	C	D	E
#	**Sources of Ignition and Requirements Pertaining to Adjacent Combustible Materials**	**Is the Facility compliant?**		**NFPA 58 Section Reference (2008 Edition)**
		Yes	**No**	
1	Are combustible materials, weeds and tall grass not closer than 10 ft. from each container?			6.4.5.2
2	Is a distance at least 20 ft. provided between containers and tanks containing flammable liquids with flash point less than 200 ^{o}F (ex., gasoline, diesel)?			6.4.5.5
3	Are electrical equipment and wiring installed per Code requirements?			6.22.2
4	Is open flame equipment located and used according to Code?			6.22.3.1
5	Are ignition control procedures and requirements during liquid transfer operations complied with.?			7.2.3.2
6	Is an approved, portable, dry chemical fire extinguisher of minimum capacity 18 Lbs. and having a B:C rating provided in the facility?			6.25.4.2
7	Is an approved, portable, dry chemical fire extinguisher of minimum capacity 18 Lbs. and having a B:C rating provided on each truck or trailer used to transport portable containers?			9.4.7
8	Is the prohibition on smoking within the facility premises strictly enforced?			7.2.3.2 (B) & 9.4.10

Note: Insert "NA" in both "Yes" and "No" columns of any items that are not applicable.

Form 6.3

Separation Distances from Containers to Buildings, Property Lines that can be Built upon, Inter-container Distances, and Aboveground Flammable or Combustible Storage Tanks

A	B	C	D	E	F	G
#	Container Size Range in gal (W.C.)	Separation between a property line, important building or other property and the nearest container which is	Minimum Distance (ft)	Is the Facility compliant? Yes	Is the Facility compliant? No	NFPA 58 Section Reference (2008 Edition)
1	501 through 2,000	Above Ground	25			6.3.1 and Table 6.3.1
		Underground or Mounded	10			
		Between containers	3			
2	2,001 through 30,000	Above Ground	50			
		Underground or Mounded	50			
		Between containers	5			
3	30,001 through 70,000	Above Ground	75			
		Underground or Mounded	50			
		Between containers	¼ sum of diameters of adjacent containers			
4	70,001 through 90,000	Above Ground	100			
		Underground or Mounded	50			
		Between containers	¼ sum of diameters of adjacent containers			
5	All sizes greater than 125 gal	Separation distance between a LP-Gas container and an above ground storage tank containing flammable or combustible liquids of flash points below 200 °F.	20			6.4.5.4 and 6.4.5.5

Note: If any of the container sizes indicated in the above form are not present in the facility, enter "NA" in both Yes and No columns.

If the LP-Gas plant is provided with every one of the redundant and fail-safe product control-design equipment indicated in Form 5.8, then the minimum distance in column D of Form 6.3 can be reduced to 10 feet for underground and mounded containers of water capacity 2,001 gal to 30,000 gal.

Form 6.4
Separation Distances between Points of Transfer and other Exposures

A	B		C	D	E	F	G
#	Type of Exposure within or outside the facility boundary		Check if exposure is present	Minimum Distance (ft)	Is the Facility compliant?		NFPA 58 Section Reference (2008 Edition)
					Yes	No	
1	Buildings, mobile homes, recreational vehicles, and modular homes with fire-resistive walls			10			Section 6.5.3 Table 6.5.3
2	Buildings with other than fire resistive walls			25			
3	Building wall openings or pits at or below the level of the point of transfer			25			
4	Line of adjoining property that can be built upon			25			
5	Outdoor places of public assembly, including school yards, athletic fields, and playgrounds			50			
6	Public ways, including public streets, highways, thoroughfares, and sidewalks	From points of transfer in LP-Gas dispensing stations and at vehicle fuel dispensers.		10			
		From other points of transfer		25			
7	Driveways			5			
8	Mainline railroad track centerlines			25			
9	Containers other than those being filled			10			
10	Flammable and Class II combustible liquid dispensers and aboveground and underground containers			20			
11	Flammable and Class II combustible liquid dispensers and the fill connections of LPG containers			10			
12	LP-Gas dispensing device located close to a Class I liquid dispensing device.			10			6.24.4.3

NOTE: Place a checkmark in column C against an exposure that is present in or around the facility. Fill columns E or F for only those rows for which there is a checkmark in column C.

If the facility contains low emission transfer equipment (i.e, all equipment identified in Form 5.9 are installed and are in working order), then the minimum separation distances in column D of Form 6.4 can be reduced to one half of the indicated values.

If the containers in the LP-Gas facility are provided with SPECIAL PROTECTION MEASURES, then continue the analysis below. Otherwise skip Forms 6.5 and 6.6 and go to Form 6.7. Also see Chapter 9.

Form 6.5
Special Protection Measures –Passive Systems

A	B	C	D		E
#	Special Protection Option	Question	Is the Facility compliant?		NFPA 58 Section Reference (2008 Edition)
			Yes	No	
1	Container Insulation	Insulation provided on each of the containers?			6.25.5.1
		Insulation material complies with the requirements of section 6.25.5.1of NFPA 58?			6.25.5.1 and 6.25.5.2
2	Mounding of containers	Each container in the facility is mounded?			6.25.5.3
		Mounding complies with each requirement under section 6.6.6.3 of NFPA 58.			6.25.5.3
3	Burying of containers	Each container in the facility is buried?			6.25.5.4
		Buried containers comply with each requirement under section 6.6.6.1 of NFPA 58.			6.6.6.1 & 6.25.5.4

Form 6.6
Special Protection Measures –Active Systems

#	Special Protection Option	Question	Is the Facility compliant?		NFPA 58 Section Reference (2008 Edition)
			Yes	No	
1	Water spray systems	Are fixed water spray systems, complying with NFPA 15[1] requirements, used for each container in the facility?			6.25.6.1
		Do fire responsive devices actuate water spray system automatically?			6.25.6.2
		Can the water spray systems be actuated manually also?			6.25.6.2
2	Monitor nozzle systems	Are the monitor nozzles located and arranged so that the water stream can wet the surfaces of all containers exposed to a fire?			6.25.6.3
		Can the water stream from a monitor nozzle reach and wet the entire surface of, at least, one half of a length from one end of each of the containers it is designed to protect?			6.25.6.3
		Do fixed monitor nozzles comply with NFPA 15[1] requirements?			6.25.6.1
		Do fire responsive devices actuate the monitor nozzles?			6.25.6.2
		Can the monitor nozzles can be actuated manually also?			6.23.6.2

1. Refer to Chapter 8 for a discussion on NFPA 15 *Standard for Water Spray Fixed Systems for Fire Protection*

Form 6.7
Protection Against Vehicular Impact

#	System Protected	Is physical protection provided?		Type of physical protection installed
		Yes	No	
1	Storage containers			
2	Transfer stations			
3	Entryway into plant			

Table 7.1
Distances to Various Types of Propane Hazards Under Different Release Models**

Model #	Details of the Propane Release Model Releases from or due to		Vapor Dispersion Distance to LFL (ft)	Explosion Hazard Distance (ft)	Fire Ball Radiation Distance (ft)
1A	Bobtail hose failure. Release of the entire inventory in the hose, quickly.	1" ID x 150 ft hose length	250	110	50
1B		1" ID x 120 ft hose length	230	103	45
1C		1" ID x 75 ft hose length	190	90	40
2a	Release of the inventory in a transfer piping 1" x 30 ft + @ 20 gpm for 10 min., due to failed excess flow valve.		135	120	25
2b	Release of the inventory in a transfer piping 2" x 30 ft + @80 gpm for 10 mins.		230	252	48
2c	Release of the inventory in a transfer piping 2" x 80 ft. @ 70 gpm for 10 mins.		328	235	74
2d	Release of the inventory in a transfer piping 2.5" x 30 ft @80 gpm for 10 mins.		269	252	59
2e	Release of the inventory in a transfer piping 3" x 30 ft + @100 gpm for 10 mins.		312	287	69
2f	Release of the inventory in a transfer piping 3" x 18 ft + @100 gpm for 10 mins.		256	284	55
3	Release from the container pressure relief valve		No ignitable vapor concentration at ground level		
4	Release from a 1" ID x 150 ft transfer piping to a vaporizer and reduced flow from a partially open excess flow valve @ 20 gpm for 10 min.		250	120	50
5	Leak from a corrosion hole in a transfer pipe at a back pressure of 130 psig (corresponding to 80 ^{o}F) for 60 min. Hole size is ¼" ID.		110	120	5
6	Release of the entire inventory in a 2" ID x 20 ft., transfer hose.		195	90	40
6a	Release of the entire inventory in a 2.5 inch dia. transfer hose x 16 ft. length		215	98	45
6b	Release of the entire inventory in a 3-inch dia. transfer hose x 12 ft. length		230	100	46
7	Transport hose blow down: Hose size 2" ID, 20 ft length release for 3min., from a Transport after the tank is filled.		25	30	<5
7a	Transport hose blow down: Hose size 2.5" ID, 16 ft length release for 3min., from a Transport after the tank is filled.		25	29	<5
7b	Transport hose blow down: Hose size 3" ID, 16 ft length release for 3min., from a Transport after the tank is filled.		31	36	<5

** Results from models described in Appendix B. The results are rounded to the nearest 5 feet.

Form 7.1
Types of Occupancies[1] Near or Surrounding the LP-Gas Facility

Type of Occupancies	Model # from Table 7.1	Hazard Distance[2] (feet)	Is Occupancy located within the hazard distance from the Facility?	
			Yes	No
Assembly Occupancies (Places of worship, Libraries, Theaters and Auditoriums, Food or Drink Bars, Sports Stadiums, Amusement Parks, Transportation Centers, etc. with 50 or more people).				
Institutional Occupancies (Elderly Persons Home or Nursing Home, Hospitals, Alcohol & Drug Rehabilitation Centers, Prisons)				
Educational Occupancies (Elementary Schools, Day Care facilities, etc).				

NOTES: (1) Different types of occupancies are defined in NFPA 5000

(2) Table 7.1 provides a number of scenarios that can result in propane release, and the resulting area exposed for different ignition mechanisms. Determine the scenarios that are applicable to the facility, for the quantities that can be released, and enter the greatest value from Table 7.1. Use the hose diameters and length that will be used at the facility if they differ from the ones in Table 7.1 and recalculate the hazard distances using a spreadsheet method that is available at npga.org. Some scenarios may not be applicable to an installation because of other mitigation measures implemented, such as a hose management procedure to minimize the possibility of hose failure.

Form 7.2
Exposure to LP-Gas Facility from External Hazards

A	B	C	D
Item #	**Type of Neighboring Operation**	**Hazard exists to the LP-Gas Facility**	
		Yes	**No**
1	Petroleum and other hazardous material storage, wholesale dispensing, etc.		
2	Metal cutting, welding, and metal fabrication		
3	Industrial Manufacturing that can pose external hazards		
4	Ports, rail yards and trans-shipment terminals handling flammable and explosive materials.		
5	Other operations that may pose hazards (gasoline and other hazardous material dispensing stations, fertilizer storage, etc).		

NOTE: If a particular activity indicated in column B does not exist, fill both "Yes" and "No" columns with "NA."

Where a "Yes" has been checked in either Form 7.1 or Form 7.2:

1) For an existing facility, communicate this information to local emergency responders for inclusion in their emergency planning.
2) For a proposed facility, implement the actions indicated in Chapter 9.

Form 8.1
Data on the Responding Fire Department

A	B		C
Item #	**Data Item**		**Data Entry**
1	Name of the Fire Department (FD).		
2A	Name of the person in the FD assisting with the data acquisition.		
2B	Position of the person in the FD assisting with the data acquisition.		
3A	Date on which FD data was collected.		
3B	Name of the person collecting the data.		
4	Number of firefighters on duty at any time.		
5	Average number of firefighters available for response.		
6A	Number of firefighters qualified to	"Firefighter I" level.	
6B		"Firefighter II" level.	
7A	Number of firefighters who would:	Respond on the first alarm to the facility.	
7B		Respond on the first alarm and who are qualified to the operations level requirements of NFPA 472 or similar local requirements	
7C		Respond on the first alarm with specific knowledge and training on the properties of LP-Gas and LP-Gas fires.	
8A	Number of fire apparatus that have the capability to deploy a 125 gpm hose line supplied by onboard water for at least 4 minutes, and, which:	Are in service in the department.	
8B		Would respond on a first alarm.	

Form 8.2

Response Time data for the Fire Departments

A	B	C	D	E
Company or Department	Time in Minutes for			
	Alarm Receipt & Handling	Turnout	Travel	Total Time

Note: Number in Column E = Sum of numbers from Columns B through D.

Form 8.3

Water Flow Rate and Total Water Volume Required to Cool Containers Exposed to a Fire

A	B	C	D	E	F	G	H
Item #	**ASME Container Size (gallons)**	**Total Surface Area of each Container[1] (ft^2)**	**Surface Area of each container to be Cooled (ft^2)**	**Water flow rate required per container (gpm)**	**Number of containers of the size indicated‡**	**Total Water flow rate required (gpm)**	**Total volume of water required for 10 min (gal)**
1	500	86	43	10.8			
	1,000	172	86	21.5			
	2,000	290	145	36.3			
	4,000	374	187	46.8			
	6,500	570	285	71.3			
	9,200	790	395	98.8			
	12,000	990	495	123.8			
	18,000	1,160	580	145.0			
	30,000	1,610	805	201.3			
	45,000	2,366	1,183	295.8			
	60,000	3,090	1,545	386.3			
	90,000	4,600	2,300	575.0			
	Other Size						
2a	Calculated water flow rate for container protection						
2b	Water flow rate rounded up to nearest multiple of 125						
3	Water for firefighter protection, if required					250	
4	Total water flow rate and volume						

Note: Column D = (1/2) x Column C Column E = 0.25 (gpm/ft^2) x Column D ;
Column G = Column F x Column E Column H = 10 x Column G
Line 2a, Column G and Column H are the sum of numbers in each row above line 2 of each column.
Line 4, Column G and Column H are the sum of numbers in rows 2b and 3.

‡ Consider only 3 containers for water supply evaluations even if the number of containers in a group is more than 3. See Section 8.2.

1 ASME container approximate dimensions

The total water requirement for the facility is indicated in item 4, column G (water flow rate) and column H (total water volume or quantity) of Form 8.3. If multiple groups of containers are present in the facility, repeat the calculations in Form 8.3 for each group of containers. The total water requirement for the facility is the largest value for any single group of containers.

Form 8.4

Evaluation of Water Availability in or Near the LP-Gas Facility

A	B	C	D		
Item #	**Water from…**	**Available?**	**Quantitative information**		
1	Public supply or from another piped-in supply through one or more fire hydrants in or near the facility	☐ Yes ☐ No	Hydrant data	Distance from Container(s) on which water will be applied (feet)	Available water flow rate from all hydrants[1] (gpm)
			Hydrant 1		
			Hydrant 2		
			Hydrant 3		
2	A nearby static water source (stream, pond, lake, etc).	☐ Yes ☐ No	Distance to water source = _____ Feet Time to set up relay = _____ min. Rate of delivery = _____ gpm		
3	Only through mobile water tanker shuttle.	☐ Yes ☐ No	Time to set up shuttle = _____ min. Sustainable flow rate = _____ gpm		

(1) Obtain the available flow rate from the local municipal water authority or the entity that supplies water to the hydrant or conduct a test to determine total available flow rate.

1. **For an exiting facility, communicate this information to local responders for inclusion in their emergency planning.**
2. **For a proposed new facility, refer to Chapter 9**

Form 9.1
Analysis Summary on Product Control and Local Conditions of Hazard

A	B	C	D	E
Item #	**CHAPTER Title**	**Section & Title**	**Reference FORM #**	**Number of "No" checked**
1	Product Control Measures in Containers & Transfer Piping	5.1: Product Control in Containers	5.1 or 5.2 or 5.3 or 5.4§	
		5.2 Product Control in Transfer Piping	5.5	
			5.6	
			5.7	
			5.8	
			5.9	
2	Analysis of Local Conditions of Hazard	6.1 Physical Protection Measures	6.1	
		6.2 Ignition Source Control	6.2	
		6.3.1 Separation distances; Container and outside exposures	6.3	
		6.3.2 Separation distances; Transfer points and outside exposures	6.4	
		6.4 Special Protection Measures	6.5	
			6.6	

§ The number of "No" for Forms from Chapter 5 is the difference between the required number of appurtenances according to NFPA 58-2008, and a lesser number found to be actually installed on the container or the transfer piping.

If, in any row of column E ("No") of Form 9.1, the entry number is greater than zero, the proposed LP-Gas facility is not in compliance with the requirements of NFPA 58-2008 for product control appurtenances or other safety measures. The design of the proposed facility must be modified to conform to the Code requirements. In addition, the following items should be noted.

- If there are any "No" checks in Form 6.3, then the separation distance requirements for containers are not satisfied. An option that may be considered is the reduction in separation distance to 10 feet for underground and mounded containers by providing "Redundant and Fail-Safe Product Control Measures." In this case, complete Form 9.4 below to ensure that each requirement of "Redundant and Fail-Safe Product Control Measures" is provided.

- If there are any "No" checks in Form 6.4, then the separation distance requirements for transfer points are not satisfied. In this case, relocate the transfer points so that the separation distances conform to the code requirements or provide the Low Emission Transfer Equipment. Complete Form 9.5 below and ensure that all requirements for Low Emission Transfer Equipment are fulfilled.

Form 9.2
Analysis Summary on Exposure from and to the LP-Gas Facility

A	B	C	D	E
Item #	**CHAPTER Title**	**Section & Title**	**Reference FORM #**	**Number of "Yes" checked**
1	Exposure to and from Other Properties	7.1 Exposure to off-site properties and persons from in-plant propane releases	7.1	
		7.2 Exposure to propane facility from external events.	7.2	

If the entry number in column E ("Yes"), Form 9.2 corresponding to Form 7.1 is greater than zero, consider one or more of the following design alternatives.

1 Consider moving the container or the transfer point to a different location, if possible and space exists, so that the property or the person is beyond the hazard distance.
2 Provide "Redundant and Fail-safe Product Control Measures". Complete Form 9.4 to ensure compliance.
3 Institute other technical measures such as installing gas and flame detectors (connected to facility shut down systems), sounding alarm outside facility premises, etc.
4 Institute administrative controls such as additional training for personnel, more frequent inspections of hoses and transfer piping, etc.

If the entry number in column E ("Yes"), Form 9.2 corresponding to Form 7.2 is greater than zero, consider one or more of the following design alternatives.

1 Implement procedures to monitor neighboring activity.
2 Install means in the adjacent plant to shut down the LP-Gas plant in case of an emergency in that plant.

Form 9.3
Analysis Summary on Fire Department Evaluations

A	B	C	D	E	F
Item #	**CHAPTER Title**	**Section & Title**	**Reference FORM #**	**Number "zeros" entered in Column C, Lines 6 through 8 of Form 8.1**	**Number of "Yes" checked in Column C of Form 8.4**
1	Fire department capability, adequacy of water supply and Emergency Planning	8.1 Data on the Fire Department	8.1		
2		8.2 Fire response water needs and availability	8.4		

If the entry number in row 1, Column E of Form 9.3 is greater than zero, consider one or more of the following design alternatives.

1 Discuss with the local Fire Department the needs of the LP-Gas facility and the evaluation results on the capability and training inadequacies of the Department.

2 Consider developing a cadre of personnel within the LP-Gas facility to respond to emergencies.

3 Institute container special protection system based on active protection approaches or passive approaches. Complete Form 9.6 and Form 9.7 below.

If the entry number in row 2, Column F of Form 9.3 is equal to zero, consider one or more of the following design alternatives.

1 Provide special protection (other than water spray or monitor systems) to containers, satisfying the requirements of section 6.23.5 of NFPA 58, 2008 edition. Complete Form 9.6 to ensure compliance.

Consider implementing the various options indicated in Table 9.1.

Form 9.4
Redundant and Fail-Safe Design for Containers

A	B		C	D	E	F
Item #	**Description**		**Features**	**Proposed for the facility?**		**NFPA 58 Section Reference (2008 Edition)**
				Yes	**No**	
1	Container Sizes for which the appurtenances are provided		Appurtenances and redundant fail-safe equipment and Low Emission transfer lines are provided for each container of water capacity 2,001 gal to 30,000 gal			6.26.4 and 6.26.5
2	Liquid or Vapor Withdrawal (1-1/4 in. or larger)		Internal Valve with integral excess flow valve or excess flow protection			6.26.3.1
			Positive Shutoff Valve installed as close as possible to the Internal Valve			6.26.3.4
3	Liquid or Vapor Inlet		Internal Valve with integral excess flow valve or excess flow protection or Back Flow Check valve			6.26.3.5
			Positive Shutoff Valve installed as close as possible to the Internal Valve or the back flow check valve			6.26.3.5
4	Railcar Transfer	Flow Into or Out of Railroad tank car	Emergency shutoff valve installed in the transfer hose or the swivel-type piping at the tank car end.			6.18.2.6 (1) and 6.26.4.1
		Flow Only Into railroad tank car	Emergency shutoff valve or backflow check valve installed in the transfer hose or the swivel-type piping at the tank car end.			6.18.2.6 (2) and 6.26.4.1
5	Cargo Tank Transfer		Protection provided in accordance with 6.26.4.1			6.26.4.1
6	Automatic closure of all primary valves (IV & ESV) in an Emergency		By fire actuation			6.26.4.2
			In the event of a hose pull-away due to vehicle motion			6.26.4.2
7	Manually operated remote shutdown of IV and ESV		Remote shutdown station within 15 ft of the point of transfer?			6.26.4.3 (A)
			Another remote shutdown station between 25 ft and 100 ft of the transfer point?			6.26.4.3 (B)
			Shutdown stations will shut down electrical power supply, if any, to the transfer equipment and primary valves?			6.26.4.3
			Signs complying with the requirements of 6.24.4.3 (C) provided?			6.26.4.3 (C)

Note: If your facility does not have a rail terminal, write the word NA in both the "Yes" column and the "No" column in item 4 of the form in the railroad tank car row. Similar option is also available if there is no cargo tank vehicle transfer station.

Form 9.5
Evaluation of Low Emission Transfer Equipment

A	B	C		D	E	F
Item #	**Description**	**Features**		**Proposed for the facility?**		**NFPA 58 Section Reference (2008 Edition)**
				Yes	**No**	
1	Transfer into Cylinders or ASME Containers on Vehicles	Delivery Nozzle and Filer Valve-Max. Liquid Release after transfer of 4 cc.	Fixed Maximum Liquid Level Gauge not used during transfer operations			6.26.5.1 (B)
2	Transfer into Stationary ASME Containers Delivery valve and nozzle combination	During product transfer or post transfer uncoupling of the hose, liquid product volume released to the atmosphere	Does not exceed 4 cc (0.24 in^3) from a hose of nominal size 1 in or smaller			6.26.5.1 (A)
			Does not exceed 15 cc (0.91 in^3) from a hose of nominal size larger than 1 in.			6.26.5.2 (B)
3	Transfer into Stationary ASME Containers Maximum filling limit	Do containers less than 2,001 gal (w.c.) have an overfilling prevention device or another approved device?				6.26.5.2 (F)
		Do containers greater than 2,000 gal (w.c.) have a float gage or other non-venting device?				6.26.5.2 (E)
4	Transfer into Stationary ASME Containers Fixed Maximum Liquid Level gauge	Not used during routine transfer operations but may be used in calibrating other non-venting liquid level gauges in the container				6.26.5.2 (C,D)

Note: If the facility does not have a particular feature described in the table, write "NA" in both the "Yes" and "No" columns corresponding its row in item 2.

Form 9.6
Special Protection Measures –Passive Systems

A	B	C	D		E
Item #	**Special Protection Option**	**Question**	**Proposed for the facility?**		**NFPA 58 Section Reference (2008 Edition)**
			Yes	**No**	
1	Container Insulation	Insulation provided on each of the containers?			6.25.5.1
		Insulation material complies with the requirements of section 6.25.5.1 of NFPA 58?			6.25.5.1 and 6.25.5.2
2	Mounding of containers	Each container in the facility is mounded?			6.25.5.3
		Mounding complies with each requirement under section 6.6.6.3 of NFPA 58.			6.25.5.3
3	Burying of containers	Each container in the facility is buried?			6.25.5.4
		Buried containers comply with each requirement under section 6.6.6.1 of NFPA 58.			6.6.6.1 & 6.25.5.4

Form 9.7
Special Protection Measures –Active Systems

Item #	**Special Protection Option**	**Question**	**Is the Facility compliant?**		**NFPA 58 Section Reference (2008 Edition)**
			Yes	**No**	
1	Water spray systems	Are fixed water spray systems, complying with NFPA 15 requirements, used for each container in the facility?			6.25.6.1
		Do fire responsive devices actuate water spray system automatically?			6.25.6.2
		Can the water spray systems be actuated manually also?			6.25.6.2
2	Monitor nozzle systems	Are the monitor nozzles located and arranged so that the water stream can wet the surfaces of all containers exposed to a fire?			6.25.6.3
		Can the water stream from a monitor nozzle reach and wet the entire surface of, at least, one half of a length from one end of each of the containers it is designed to protect?			6.25.6.3
		Do fixed monitor nozzles comply with NFPA 15 requirements?			6.25.6.1
		Do fire responsive devices actuate the monitor nozzles?			6.25.6.2
		Can the monitor nozzles be actuated manually also?			6.25.6.2

Equivalent Protection to a Water Supply for Industrial and Bulk Facilities

In the case where water supply is not available in or near the LP-Gas facility, or is inadequate or it is prohibitively expensive to connect to a public or private water supply hydrant, alternative methods for providing protection should be considered. In lieu of providing a water supply, several alternatives are indicated in Table 9.1, which can offer an equivalency to a water supply system.

The intent of the controls identified in Table 9.1 is to maintain the entire system as a gas tight entity. These methods include reducing the service life of equipment, increasing the design pressure rating of the system beyond the requirements of NFPA 58, or providing early detection and isolation of the system to ensure product control. This list is not exhaustive and is not ranked in an order of priority.

Table 9.1

Suggested Alternative Methods for Industrial and Bulk Plants That Do Not Pose a Hazard But Lack a Water Supply

Item #	Possible options to implement when adequate water supply is not available
1	Reduce the service life of hoses.
2	Increase frequency of equipment inspection.
3	Establish a service life program for the maintenance of the container pressure relief devices. This could include the installation of a listed multiple port valve and certifying that the relief devices are properly set and maintained every 5 to 10 years.
4	Increase the design strength of the piping and fitting systems.
5	Install emergency shutoff valves in conjunction with container internal valves.
6	Install emergency shutoff valves downstream of transfer pump outlets and upstream of the vapor and liquid valves at the bulkhead.
7	Install pneumatic tubing along the facility boundary to serve as a perimeter fire detection system. This would provide protection of the facility against exposure fires.
8	Provide optical flame detection or linear heat detection, or a gas detection system connected to an isolation valve installed downstream of every liquid and vapor nozzle on the container. This system could also be monitored to send a signal to an alarm company that notifies the Fire Department of an event.
9	Increase the separation distances of internal facility exposures to the container. These exposures would include a site dumpster, idle or waste pallets and combustibles, and increasing the parking distances between the bobtails and transports in relation to the container.
10	Relocate overhead power lines away from all container and cylinder storage areas to protect against ignition in the event of a line dropping due to wind or power pole impact.
11	Eliminate all combustible vegetation within 30 feet of the LP-Gas container. This can be accomplished using gravel, or paving the site yard.
12	Install tanks using the mounding or burial method.

Appendix B

Results of Hazard Distance Calculations For Different LPG Release Scenarios

In this Appendix are presented the results obtained by exercising various mathematical models to calculate the hazard distances for several scenarios of LPG releases from the containers, transfer piping, hoses and pressure relief valves.

TABLE B-1
LPG Release Cases[1] for Hazard Assessment
Recommended for use in the FSA Manual by authors

Aggregate Storage	Case #	Details	Hose ID	Hose Length	Instantaneously Released Propane Total Quantity		Flashed Vapor+ Aerosol[2]	Continuously Released Propane				Total Mass Released	Assumed to be in Vapor + aerosol phase	Assumed to be in liquid[3] phase on ground
								Time	Rate	Rate	Flashed Vapor + Aerosol[2]			
Gal.	#		in	ft	gal	Lb.	Lb[3]	Min.	gpm	lb/ min	Lbs/ min	Lb	Lb	Lb
4,001 to 8,000	1	Bobtail hose failure, Release of inventory in hose.	1.0	150.0	6.1	25.1	17.5	NA	NA	NA	NA	25.1	17.5	7.6
	2	Transfer piping 1" x 30 ft + 20 gpm, 10 min.	1.0	30.0	1.2	5.0	3.5	10.0	20.0	82.1	57.2	825.8	576.0	249.9
	3	PRV release @ 275 psig, 30 sec.	----	----	----	----	----	0.5	----	1,021.0	----	510.5	510.5	----
8,001 to 18,000	4	Bobtail hose failure	1.0	150.0	6.1	25.1	17.5	NA	NA	NA	NA	25.1	17.5	7.6
	5	1 in x 150 ft transfer piping to a vaporizer + partial flow from an excess flow valve @ 20 gpm for 10 mins	1.0	150.0	6.1	25.1	17.5	10.0	20.0	82.1	57.2	845.9	590.0	256.0
	6	Leak from a 1/4 inch dia pipe corrosion hole, 60 min	0.25	0.0	0.0	0.0	0.0	60.0	18.8	77.2	53.8	4,629.0	3,228.3	1,400.7
	7	PRV release at 12,390 scfm air, one hour						60.0	----	1,240.2		74,413.5	74,413.5	
> 18,000	8	2 inch transfer hose, 20 ft. long	2.0	20.0	3.3	13.7	9.6	NA	NA	NA	NA	13.7	9.6	4.2
	9	Transport Hose Blowdown: Hose size 2" dia, 20 ft length x 3min after the tank is filled.	2.0	20.0	0.0	0.0	0.0	3.0	1.1	4.5	3.1	13.5	9.4	4.1
	10	PRV release at 12,390 scfm air for one hour						60.0	----	1,240.2		74,413.5	74,413.5	

Notes to Table B-1:

1. Assumes that storage temperature is 80 ^{o}F for all containers. The pressure in the container is the saturation pressure of LPG at 80 ^{o}F, which is 130 psig.

2. The mass of aerosol in a vapor + aerosol cloud is assumed to be one half of the liquid mass formed after flashing. That is the mass of vapor + aerosol is X + (1-X)*0.5, where X is the mass fraction of aerosol formed by the flashing process.

3. Instantaneously released mass of liquid released after the flash process

4. The volume flow rate of propane through the PRV is proportional to the inverse square root of the propane vapor density, assuming that the pressure drop and the orifice size are equal. Hence to convert from air flow SCFM to propane flow SCFM multiply air flow SCFM by sqrt(1/1.46). Also, the velocity of gases exiting the PRV is calculated assuming a 2 inch diameter at the exit section.

5. Pressure relief valve discharge based on a 1 1/16 in lift in a 1.75 in. diameter valve seat. Rated at 12,200 SCFM air.

Table B-2
Distances to LFL Concentrations and Hazard Areas

Case #	Details	Puff Type Dispersion[1]				Plume Type Dispersion				Explosion[2] Hazard Distance	Fire Ball[4] Dist.
		Maximum Downwind Travel Distance (ft)	Maximum Radius of LFL Concn. Contour (ft)	Downwind Distance to Maximum LFL Radius (ft)	Max Ground Hazard Area (ft^2)	Maximum Values for Downwind Travel Distance (ft)	Cross-wind width (ft)	Down - wind Distance to Max. Width (ft)	Ground Hazard Area[5]. (ft^2)	(ft)	(ft)
1	Bobtail hose failure.	251	10.4	147.6	342	----	----	----	----	111	53
2	Transfer piping 1" x 30 ft + 20 gpm for 10 min.	135	5.8	78.7	107	115	8	66	475	120	26
3	PRV release 275 psig for 30 sec. 1/16 in lift x 1.75 in ID seat (Rated flow 10200 SCFM air).	----	----	----	----	----	----	----	----	----	----
4	Bobtail hose failure	251	10.4	147.6	342	----	----	----	----	111	53
5	1 in x 150 ft length transfer piping to a vaporizer + reduced flow from a partially open excess flow valve at 20 gpm for 10 mins	251	10.4	147.6	342	115	8	66	475	120	53
6	Leak from a 1/4 inch dia corrosion hole in a pipe: 60 min at a pressure corresponding to 80 ^{o}F (130 psig)[6]	----	----	----	----	112	8	75	439	117	4
7	PRV release at 12,390 scfm air for one hour	----	----	----	----	----	----	----	----	----	----
8	2 inch dia transfer hose x 20 ft. long failure.	194	8.3	114.8	218	----	----	----	----	91	41
9	Transport Hose Blowdown: 2" dia Hose, 20 ft long x 3min from a Transport after tank filling.	----	----	----	----	26	8	75	103	28	2
10	PRV release at 12,390 scfm air for one hour	----	----	----	----	----	----	----	----	----	----

NOTES to Table B-2

1. Dispersion of vapors: Assumes that the flashed vapor+ aerosol together disperse as a heavy gas in "F" stability weather at a wind speed of 1.5 m/s (3.4 mph).
If a puff of vapor is released followed by a long duration (at least 5 minute spill time) release then the dispersion hazard is calculated using both the puff calculations and the continuous plume calculations.

2. **Vapor explosion:** Assumed hazard criterion is 1 psi overpressure (Ref: eqn C-1, Offsite Consequence Analysis Guidance, EPA 1999).

If the release occurs instantaneously (as a puff of vapor + aerosols) then the mass used for the explosion hazard calculation is the total mass of flashed vapor + entrained liquid aerosols. If the release occurs over a longer period of time (continuous release), then the mass of vapor that can participate in a vapor cloud explosion is the mass of vapor + entrained aerosol released over the duration of time taken for the vapor concentration to decrease from 100% to LFL in the dispersing plume. This time is equal to the maximum downwind LFL distance divided by the wind speed.

3. **Radiation from pool fire**: Pool depth is assumed to be 0.5 cm for instantaneously released liquid. Also, it is assumed that all liquid formed after the flash forms a pool. In the case of continuous release the pool diameter is determined by a balance between evaporation due to fire and the full spill rate without consideration of the flashing. The evaporation rate for relatively small pool fires is given by the formula: liquid regression rate (cm/min) = 0.0076 * (lower heat of combustion/latent heat of evaporation)

[Reference: Burgess, D. and M. Hertzberg, "Radiation from Pool Flames," Heat Transfer in Flames (Ed: Afghan and Beer), Scripta Book Co, Washington, DC, 1974.

Radiation effect is calculated using equation 10-1 of Offsite Consequence Analysis Guidance, EPA 1999. The thermal radiation hazard is based on a radiant intensity of 5 kW/m^2.

4. **Fire ball**: The hazard distance is approximately proportional to the square root of the mass of propane released. Table 30 of Offsite Consequence Analysis Guidance, EPA 1999.indicates that for 1000 lb propane release the distance is about 264 ft. The results in OCAG (Table 30) is correlated as, X (ft) = 12.83 * $(M \text{ in Lbs})^{0.441}$

The mass used is the total release in the case of instantaneous release. In the case of continuous release, the total mass used is the mass released first instantaneously + the continuous release over the period of time equal to the dispersion time to LFL centerline concentration in the plume.

5. **Hazard area for plume dispersion** is calculated as the sum of two triangular areas. The first triangle is from origin to the maximum LFL. down wind distance. The second triangle is from maximum LFL width location to maximum downwind distance.

6. **The hazard distances** from explosion and the fireball are calculated using the mass of vapor in the dispersion plume where the plume ground level concentration is above the LFL concentration. This is equal to the product of the release rate and the duration of time it takes for vapor released at the source to reach the downwind distance where the ground level concentration is equal to the LFL. The vapor is assumed to move at wind speed.

7. **Ground level hazard area from propane releases from relief valves**: Results from the investigation by Cornwell, et al., (Ref 1 below) of the dispersion of LPG vapors released from pressure relief valves (PRVs) on LP containers indicate that for release velocities greater than 100 ft/s no LFL concentrations were found at any level below the exit section of the PRV riser pipe. It is based on the results of the work of Cornwell, et al., that the ground level concentration is assumed to be below LFL and, therefore, the hazard distance is shown as zero in Table B-2, case # 7 and case # 10 for releases from PRVs.

TABLE B-3
Various Parameters and their Values Used in the Cases

Parameter Description	Value	Unit	Reference #
Pi = Circumference to diameter ratio of a circle	3.141593		
Coefficient of discharge for a hole in transfer piping	0.62		(2)
Wind speed for F stability weather	1.5	m/s	
Burning rate of a LPG liquid pool	0.890026	cm/min	(3)
	0.0292	ft/min	
Release rate from a 1/4 inch corrosion hole	18.79816	gpm	
	2.512788	ft^3/min	
Area of liquid pool	86.0534	ft^2	
Diameter of pool fire (fire on the liquid pool)	10.46741	ft	
Distance (X) to a thermal radiation level of 5 kW/m^2 (For this radiation level from a LPG pool fire with 40% radiation efficiency the X/d ratio is 4.71)	49.30148	ft	

References:

(1) Cornwell, J.B., D.W. Johnson, and W.E. Martinsen, "Relief Valves and Vents: How Exit Conditions Affect Hazard Zones," Presented at the American Institute of Chemical Engineers 1990 Summer National Meeting, San Diego, California, August, 1990. Also available at, http://www.questconsult.com/relief.html

(2) Chemical Engineers' Handbook, 5th edition, p 5-13, Fig 5-18, 1973.

(3) Afghan & Beer (editors), "Heat Transfer in Flames", chapter on Radiation from Pool Fires authored by Burgess & Hertzberg, p417, Scriptya Book Co. Washington DC, 1974.

TABLE B-4

Thermodynamic Properties of Propane

Property Item	SI Units			Conventional Units		
	Pure Propane	Commercial Propane	Units	Pure Propane	Commercial Propane	Units
Chemical Formula	$CH_2 (CH_3)_2$			$CH_2 (CH_3)_2$		
Molecular weight	44.097		kg/k mole	44.097		lb/lb mole
Critical Pressure	1,422.12		kN/m^2	206.26		psia
Critical Temperature	598.56		K	617.4		^oF
Vapor pressures at various temperatures						
50 ^oF	635.6		kN/m^2	92.2		psia
60 ^oF	741.4		kN/m^2	107.5		psia
70 ^oF	859.6		kN/m^2	124.7	145.0	psia
80 ^oF	991.3		kN/m^2	143.8		psia
90 ^oF	1,137.0		kN/m^2	164.9		psia
100 ^oF	1,297.9		kN/m^2	188.3	218.0	psia
110 ^oF	1,475.1		kN/m^2	213.9		psia
120 ^oF	1,669.3		kN/m^2	242.1		psia
Boiling Temperature at atm pressure (NBT)	231.3		K	-43.73	-44	^oF
Freezing Temperature	85.7		K	-305.8		^oF
Density of Liquid at NBT (saturated cond)	582.5		kg/m^3	36.36		lb/ft^3
Density of Liquid at 60 ^oF	503.8		kg/m^3	31.45	31.45	lb/ft^3
				4.20	4.20	lb/gal
Density of Liquid at 80 ^oF	491.8		kg/m^3	30.70		lb/ft^3
				4.10		

Property Item	SI Units			Conventional Units		
	Pure Propane	Commercial Propane	Units	Pure Propane	Commercial Propane	Units
Density of saturated vapor at NBT	2.432		kg/m^3	0.15181		lb/ft^3
Density of vapor at 60 ^oF (@ 1 atm pressure)	1.937		kg/m^3	0.1210	0.1155	lb/ft^3
Vapor specific density at STP (1 atm & 68 ^oF) w.r.t. air	1.46			1.46		
Specific heat of liquid @ 60 ^oF	2,637.2		J/kg K	0.63	0.63	Btu/lb ^oF
Specific heat ratio of vapor (C_p/C_v)	1.14			1.14		
Heat of Vaporization @ NBT	427.98		kJ/kg	184		Btu/lb
Heat of Combustion (lower heat)	46.30		MJ/kg	19905.5		Btu/lb
Heat of Combustion (higher heat)	50.12		MJ/kg	21548		Btu/lb
Lower Flammability Limit %	2.15		%	2.15		---
Upper Flammability Limit %	9.6			9.6		
Liquid Enthalpy @ saturated at indicated Temp (Enthalpy is 0 @ -40 ^oF) -44 ^oF	-4.75		kJ/kg	-2.04		Btu/lb
60 ^oF	134.85		kJ/kg	57.976		Btu/lb
70 ^oF	149.40		kJ/kg	64.232		Btu/lb
80 ^oF	164.23		kJ/kg	70.605		Btu/lb
90 ^oF	179.36		kJ/kg	77.11		Btu/lb
100 ^oF	194.83		kJ/kg	83.763		Btu/lb
110 ^oF	210.70		kJ/kg	90.584		Btu/lb
120 ^oF	227.01		kJ/kg	97.597		Btu/lb

TABLE B-5
Calculation of the mass fraction of LPG and n-Butane, which Flashes to Vapor When released from pressurized storage

Release from a storage Temperature of (^oF)	% Mass of released liquid, which flashes to vapor directly	
	Propane	n- Butane
60	32.6	9.0
70	36.0	12.3
80	39.5	15.5
90	43.0	18.9
100	46.6	24.2
110	50.3	26.0
120	54.2	29.6